Installation Instructions

1131 VIA CALLEJON, SAN CLEMENTE, CA 92673

1. Remove old bumpstop.
2. Install the new bump stop. You must place the supplied washer between the mounting surface and the bump stop. See diagram

171168

6/JUN/07 BRH

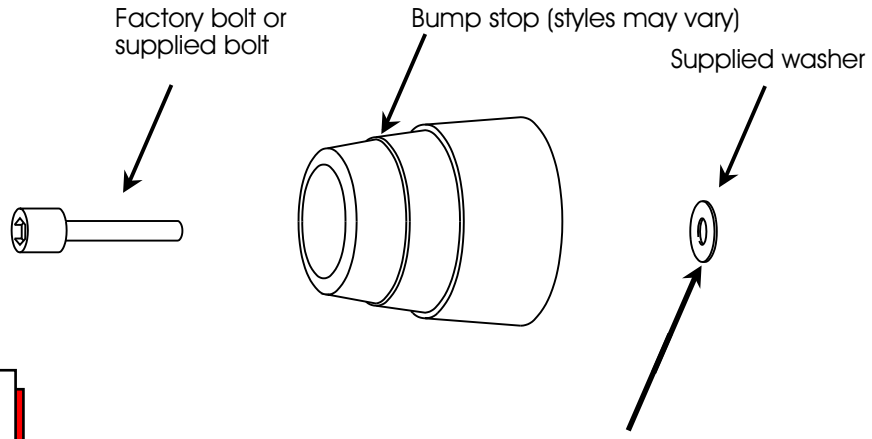

© 2007 Energy Suspension. All rights reserved.
May not be reproduced, in any form, or by any means, without the written consent of Energy Suspension.

CAUTION: You MUST put supplied washer between the bump stop and its mounting surface or the part may fail.

Installation Instructions

1131 VIA CALLEJON, SAN CLEMENTE, CA 92673

1. Remove old bumpstop.
2. Install the new bump stop. You must place the supplied washer between the mounting surface and the bump stop. See diagram

171168

6/JUN/07 BRH

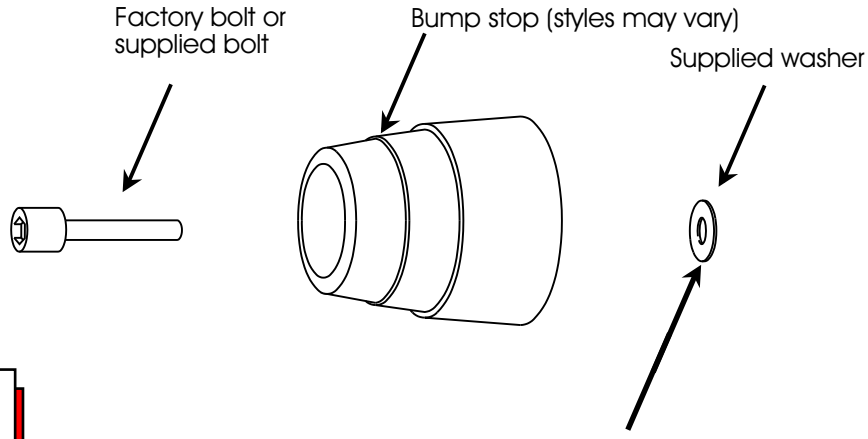

© 2007 Energy Suspension. All rights reserved.
May not be reproduced, in any form, or by any means, without the written consent of Energy Suspension.

CAUTION: You MUST put supplied washer between the bump stop and its mounting surface or the part may fail.