Installation Instructions

Bracket & Lever Kit

TH-200, TH200-4R, TH-250, TH350, TH400, TH700-R4, 4L60, 4L60E, 4L65E,4L80E & 4L85E

Part Number 35498

©2010, 2000 by B&M Racing & Performance Products

NOTE: Electronic transmissions equipped with a PRNDL switch will not work with this kit you will need optional accessory kit #75498.

STEP 1. Raise and safely support the vehicle at least 1-2 feet off the ground. Remove the stock selector lever nut and the selector lever. Discard the stock lever and the stock shifter linkage. Install the **B&M** selector lever in position using the stock selector lever nut **(See Figure #1)**. Torque the nut to 23 lb-ft. The lever should move smoothly from front to rear with a positive stop in each gear position.

STEP 2. Remove the two transmission oil pan bolts from the middle of the left side of the oil pan. Install the cable bracket in position **(See Figure #1)**. The bracket must be installed with the two spacers between the pan and the bracket. (If your transmission is equipped with a cast aluminum oil pan, these spacers should be omitted. With a TH-400 with a cast aluminum oil pan the cable bracket may have to be modified.) Install the two 5/16-18 x 1.00" bolts (Metric transmissions use the two 8mm x 25mm bolts) supplied and tighten 12-13 lb-ft. Do not overtighten as this can damage the pan gasket.

WARNING: In some cases possible modification to the cable bracket

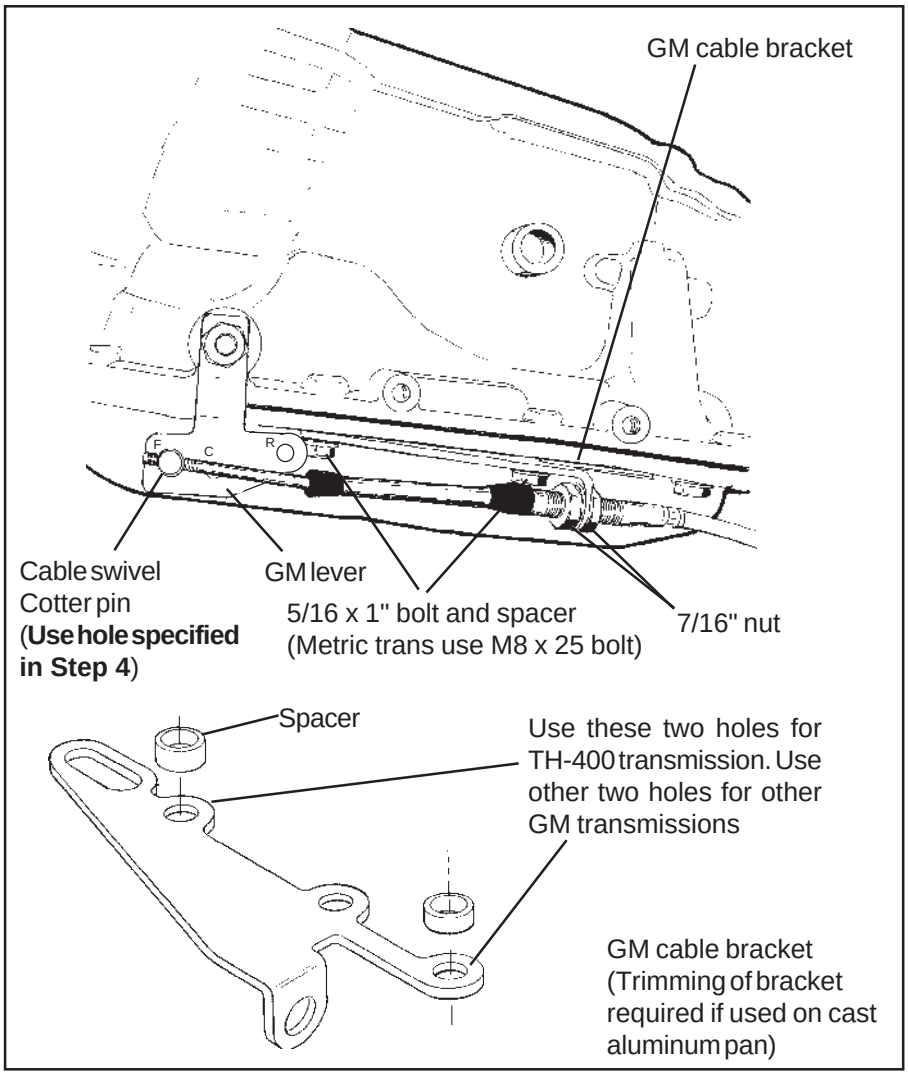

Figure #1

might be required for the 4L80E and 4L85E. Verify that selector lever does not grind on cable bracket before moving on to step 3.

STEP 3. Route the shifter cable according to **Figure #2**. Avoid kinks and sharp bends and route the cable away from hot engine or exhaust parts. Remove the two rubber boots, one large nut, and a large lockwasher from the threaded end of the shifter cable. Slide the end of the cable into the cable bracket. Install the large nut and lockwasher loosely over the end of cable. Install the two rubber boots onto the end of the cable. Install the swivel on the threaded end of the cable and position it in the center of the threaded portion.

STEP 4. Move the transmission selector lever by hand to the full rear position (LOW). Place the shifter lever to the LOW gear position (all the way back). Adjust the large nuts on the cable so that the swivel will slide into the correct hole (see the list below) on the selector lever. Tighten the large nuts completely. Be sure that the swivel will slide freely in and out of the hole in the selector lever. **Note: The shifter will not operate correctly unless the correct hole in the selector lever for your shifter is used**.

Leave the swivel out of the hole and move the selector lever to PARK, all the way forward. Also move the shifter to the PARK position (all the way forward). Reinsert the swivel into the correct hole in the selector lever. Check to see that the swivel will slide freely in and out of the front hole in the selector lever in this position. If it does not slip in freely, adjust the swivel slightly until it will slip into the hole in the lever.

Move the shifter back to the LOW gear position and check that the swivel will still slide easily in and out of the correct hole in the selector lever. (If you do not use the correct hole in the lever, it will be impossible to correctly adjust the cable.) Operate the shifter through all the gear positions. Check to make sure the swivel will slide in and out of the correct selector lever hole in each gear position. The shift cable is now correctly adjusted. Install the cotter key supplied with the shifter into the swivel and spread the key ends.

If you have a problem, ***DO NOT FORCE THE SHIFTER***, this will damage the cable, the shifter or the transmission. Simply start at the beginning

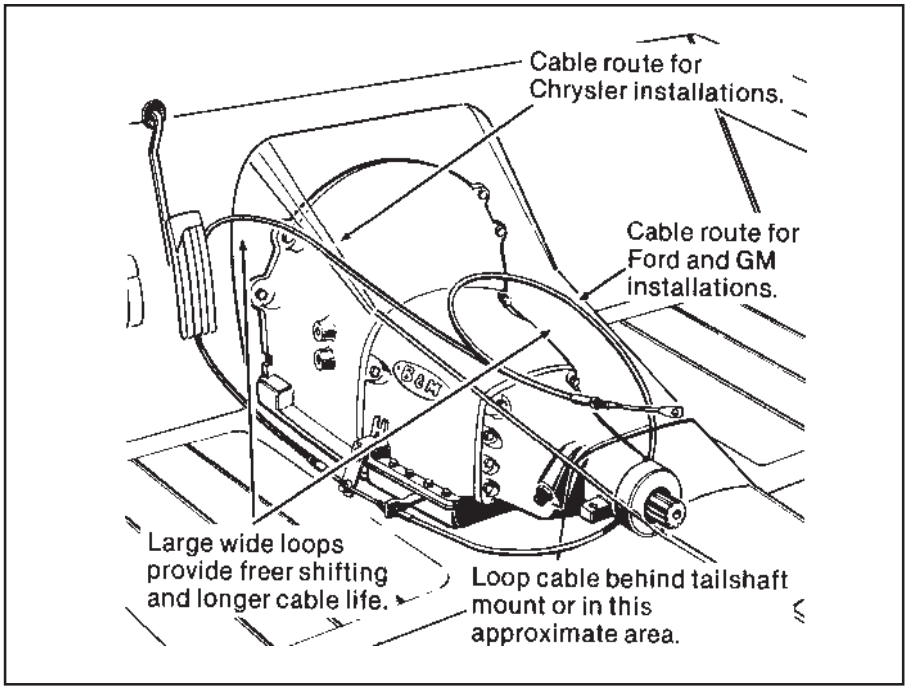

Figure #2

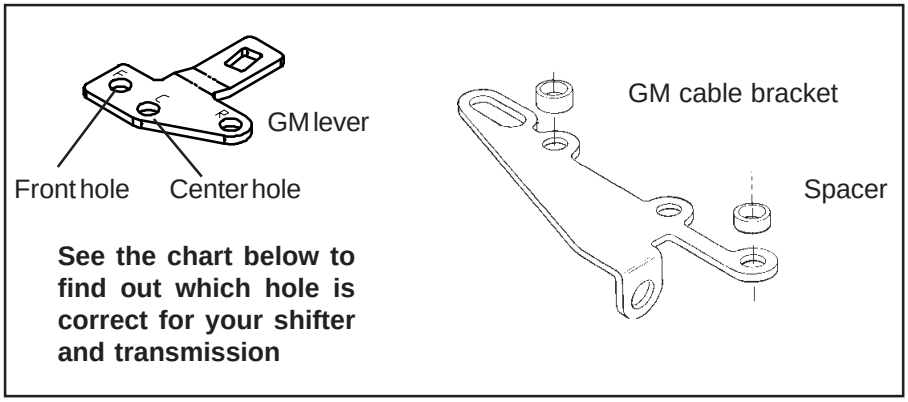

Figure #3

Selector Lever Hole Usage

FRONT HOLE	CENTER HOLE
Megashifter, Hammer	Star Shifter
Pro Stick, Street Stick	Quick Click
Sport Shifter, Unimatic	Quick Silver #80676
QuickSilver #80683	Z-Gate
Pro Ratchet #80842	Pro Ratchet #80841

Note: The shifter will not operate correctly unless the correct hole in the selector lever for your shifter is used.