Installation Instructions
TH700(4L60) Shift Improver Kit
1982-93 Non electronic

Part No. 70239

© B&M Racing & Performance Products 1996

The **B&M TH700 Shift Improver Kit** has been designed to work on all **1982 thru 1993** non electronic TH700's. During 1982 thru 1993 model years four major changes have been made to the TH700's hydraulic circuitry. It is important that you know the year model of the transmission your working on so that you can identify the correct checkball placement diagram. **Figure 1** describes where to look on your transmission for model year identification. If the original transmission in your vehicle was replaced by a factory rebuild, the I.D. number may have been changed. In this case you will have to compare the components in your transmission with the check ball placement diagrams in the instructions to determine the correct check ball placement.

WARNING: Incorrect checkball placement can result in serious transmission damage. Be sure to follow the instructions carefully.

We recommend that you read through the instructions completely before beginning the installation, so you can familiarize yourself with the installation procedure and tools required. Check the tool list at the end of these instructions for the tools required to install your **B&M TH700 Shift Improver Kit.**

Installation of the **B&M TH700 Shift Improver Kit** can be accomplished by anyone with minimum mechanical experience. It is however, important to closely follow the instructions.

NOTE: The **B&M TH700 Shift Improver Kit** is not a cure-all for an ailing transmission. If your transmission is slipping or in poor general shape, the installation of this Shift Improver Kit may worsen the condition. However on a properly operating transmission in average condition, the Shift Improver Kit will provide the kind of transmission performance your looking for.

When installing your Shift Improver Kit there are several other **B&M** products you may wish to consider:

TH700 Kickdown Kit 70237 The TH700 has a hydraulic circuit that causes a forced 4-3 down shift whenever the throttle is opened past two thirds travel. In some applications a forced 4-3 down shift is undesirable, **B&M** has developed an easily installed kit that will eliminate the part throttle 4-3 down shift feature. This kit does not alter normal shift speeds or affect detent operation. This kit is best installed along with **B&M**'s 70239 **Shift Improver Kit**. However it can also be installed independent of other modifications, and valve body removal is not required (pan gasket not included.)

Transmission Oil Cooler We feel that it is very important that every vehicle used in a heavy duty application (racing, towing, RV, etc.) should have an oil cooler. Heat is the major cause of transmission failures, and an oil cooler is an inexpensive safeguard against overheating and failure. **B&M** offers a wide range of transmission coolers to suit every need, which are available at your **B&M** dealer. The TH-700 runs hotter than most other automatic transmissions, making an oil cooler almost a necessity.

Trick Shift Performance ATF Trick Shift performance automatic transmission fluid is the industry's leading performance **ATF.** A specially blended oil with foam inhibitors, extreme pressure agents and shift improvers, this fluid assures protection while delivering the fastest possible shifts. You literally "Pour in performance." Available at your **B&M** dealer.

DRAIN PLUG KIT 80250 TH-700 transmissions do not come from the factory equipped with drain plugs. The **B&M** Drain plug kit is inexpensive and easy to install. It eliminates the mess of a fluid change or pan removal.

Printed in **U.S.A.**

9500538-01

TH-700 DEEP OIL PAN 70289 The **B&M** TH-700 deep oil pan ads approximately 3 quarts of extra oil capacity to your transmission. The additional oil capacity will help reduce the temperature of your transmission, thereby promoting longer transmission life.

TEMPERATURE GAGE KIT 80212 Most transmission and converter failures can be traced directly to excessive heat. The **B&M** transmission temperature gage can save you a costly repair bill by warning you ahead of time of an overheated transmission. The **B&M** temperature gage is extremely accurate and dependable, it comes with all necessary hardware and is easy to install.

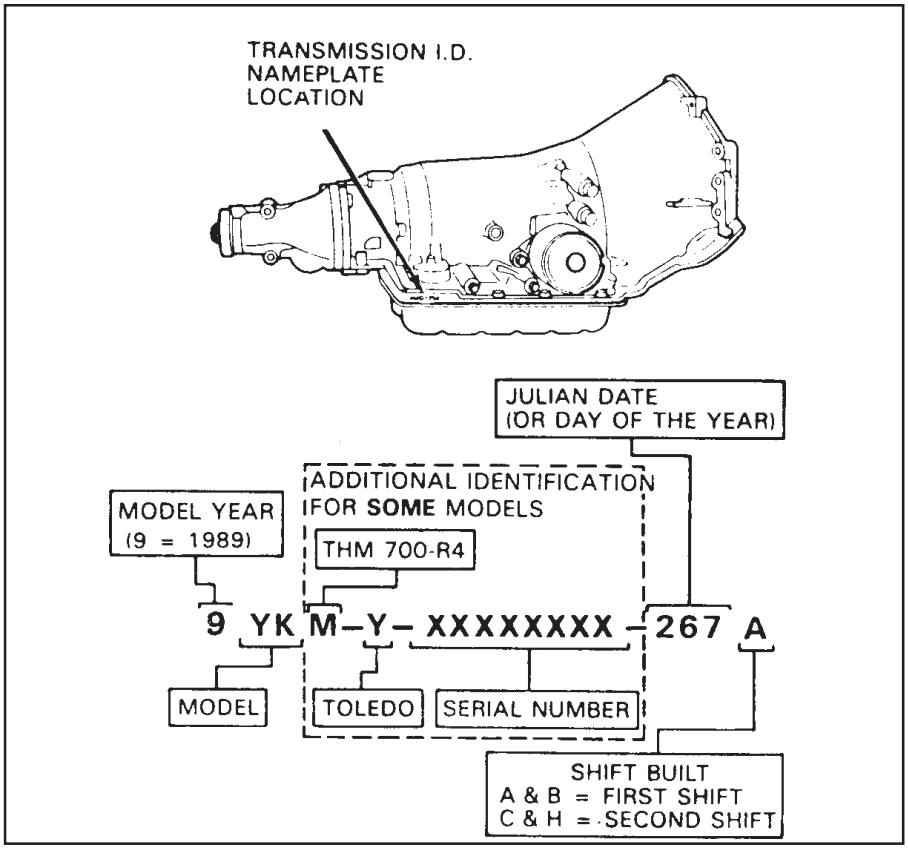

Figure 1

INTRODUCTION

This kit can be installed in a few hours by carefully following the instructions. **Read all instructions first to familiarize yourself with the parts and procedures.** Transmission components are precision fit, work slowly and do not force any parts. Burrs and dirt are the number one enemies of an automatic transmission. Cleanliness is very important, so a clean work surface from which oil can easily be removed is necessary.

This kit contains all parts necessary to obtain two different levels of performance, depending on intended use:

1. Heavy Duty; Towing, campers, motor homes and 4-wheel drive vehicles. Shift feel is firm and positive.
2. Street; Dual purpose performance vehicles, street and strip performance cars. Street level produces the firmest shift feel.

DISASSEMBLY

Automatic transmissions normally operate at temperatures between 150 F and 250 F. We suggest the vehicle be allowed to cool for several hours before disassembly to avoid burns from hot oil and parts. Have an oil drain pan ready to catch oil and a tray on which to put small parts so they won't get lost. The vehicle should be raised so there is at least 2 feet ground clearance for ease of installation and safety.

CAUTION: MAKE SURE THE VEHICLE IS RIGIDLY AND SECURELY SUPPORTED, JACK STANDS, WHEEL RAMPS OR A HOIST WORK BEST, DO NOT USE JACKS ALONE.

STEP 1. The TH700 does not have a drain plug. Position your drain pan beneath the transmission to catch oil. Remove the oil pan by removing the rear bolts first, then work towards the front. Loosen but do not remove the three front bolts. If the pan sticks to the gasket, insert a flat screwdriver between the pan and case and pry down gently to break pan loose. Now remove the front three bolts slowly to permit draining the rest of the oil. Remove pan gasket material from the pan and case.

STEP 2. Remove the oil filter by gently pulling it straight down. The pickup tube has an O-ring (or seal) around the end that fits into the pump housing. Sometimes the O-ring (or seal) remains in the pump bore, if so remove O-ring (or seal) from pump.

STEP 3. (See Figs. 2 and 3) There are a variety of different wiring harnesses used on the TH700. Before proceeding further make a sketch and some notes describing your particular unit, recording which connectors go to which switch. Notice that the connectors are color coded. Now remove connectors from switches. Unplug the wiring harness from the case electrical connector by prying the lock tab away from the plug and pulling down on the plug, **do not pull on the wires.** Removing solenoid is not required, just tie the wires up out of the way.

STEP 4. Remove all **except** the center valve body bolt **(See Fig. 2.)** Beginning with the mid 1987 model year, TH-700's have a tube crossing over the valve body. This tube is removed by simultaneously pulling both ends out of their respective bores. With the tube removed (if equipped) hold the valve body up firmly with one hand and remove the remaining bolt slowly. There are several check balls in the valve body

along with several pints of oil. Have your drain pan ready to catch the oil and check balls (should they fall out.) Save all check balls in a safe place where they won't get lost.

STEP 5. Beginning mid 1987 model year, TH-700's have an auxiliary valve body located where earlier models have a cover plate **(See Fig. 2.)** Remove the cover plate or auxiliary valve body. Be careful not to drop the check ball located in the auxiliary valve body **(See Fig's. 8, 8a, 8b,& 8c)** Remove the 1-2 accumulator housing while holding the separator plate up to the case. Then slowly lower the separator plate and retrieve the check balls located above the plate. Make note of the **color** and **location** of the 1-2 and 2-3 accumulator springs for correct reassembly **(See Fig. 10.)** Remove all old gasket material from these parts. **Note: Early 1982 TH-700's had a support plate located under the 1-2 accumulator housing.** If your transmission is fitted with this plate, carefully save the gasket as you will have to re-use the gasket upon reassembly (Gasket GM P/N 8642129 is not included in kit.)

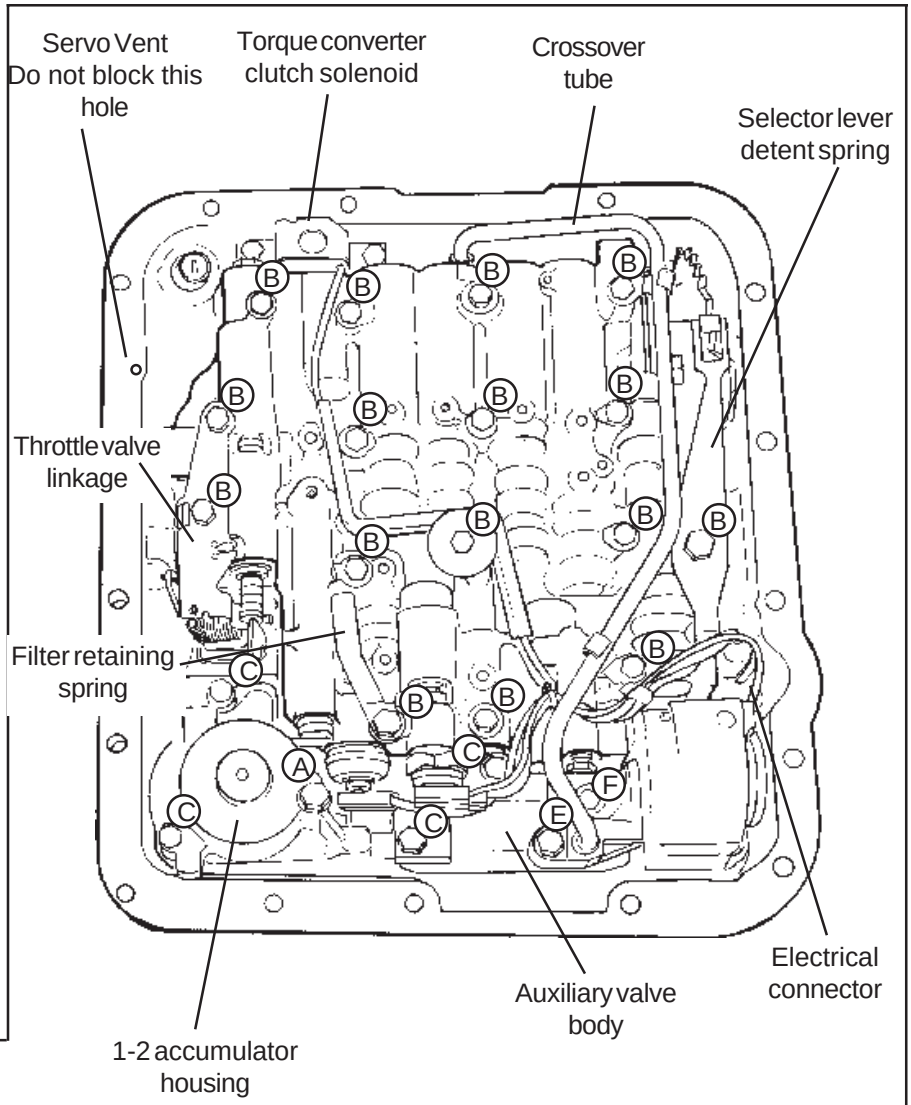

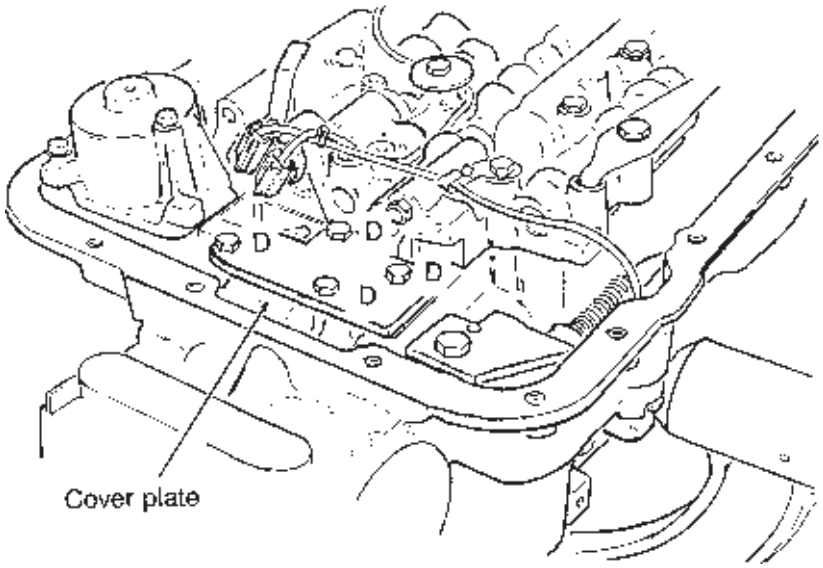

Draw a sketch of your wiring harness before disassembly.

Bolt	Length
A	64.5mm
B	49.5mm
C	34.5mm
D	15.5mm
E	44.5mm
F	17.0mm

Figure 2

MODIFICATIONS

STEP 6. Using the supplied drills, enlarge the holes in your separator plate as indicated in **Fig. 4.** Carefully deburr the holes after drilling.

STEP 7. Rinse off valve body with clean solvent to remove any dirt or grit. Move to a clean working area. The valve body consists of precision fit components which will not tolerate dirt or burrs.

STEP 8. Heavy Duty and Street; MTV upshift valve (See Fig. 5.)

Remove the pin at the end of the MTV upshift valve bore. Remove the plug, valve and spring from the bore. Set the spring aside (it will not be re-used.) Re-install the valve, plug and pin in reverse order of removal.

STEP 9. Street Only; Line bias valve.

Compress and remove the large roll pin retaining the line bias valve **(See Fig. 5.)** Take care to not distort the roll pin more than is required to remove it. Remove the aluminum plug, valve and spring from bore. The stock spring will not be re used. Insert the blocker rod from the kit into the bore. Install the valve and aluminum plug as removed. If the aluminum plug extends into the roll pin hole, remove the blocker rod and grind or file a small amount from either end of the blocker rod until the aluminum plug clears the roll pin hole when all parts are installed.

STEP 10. Heavy Duty and Street; Pressure regulator.

Remove the snap ring at the end of the pressure regulator bore in the oil pump assembly **(See Fig. 6.)** Use a screwdriver to hold the pressure regulator assembly while removing the retaining ring. If the sleeves stick in the bore, lightly rap the sleeve with a small rod and a mallet (piece of 2X4.) Remove two sleeves with valves and the pressure regulator spring. The pressure regulator may fall out but it does not need to be removed. Reassemble the pressure regulator assembly using the **BLUE** spring from the kit **(See Fig. 7.)** Use the new retaining ring from the kit. Make sure the retaining ring is firmly seated in its groove when assembled.

CAUTION: The pressure regulator valve train MUST be installed in the proper order with the sleeves and valves oriented in the indicated directions. There are several ways the sleeves and valves can be installed, however, only the orientation shown will work properly. Improper installation will cause low line pressure, resulting in slipping clutches and burned friction elements.

It is very important to reassemble the pressure regulator correctly to insure proper operation of the transmission.Take a little extra time with this step and work slowly.This is a precision fit valve assembly so do not force the valves back into the bore. During reassembly, you can smear grease on the valve and spring before you insert them into the bore to hold them in place while you install the boost valve assembly.

To ease installation a thin blade screwdriver can be used to hold the assembly up into the bore while you install the snap ring. Place the snap ring around the screwdriver and slide it up into place with the snap ring pliers. Be sure the snap ring goes into the groove and is not against the step in the bore.

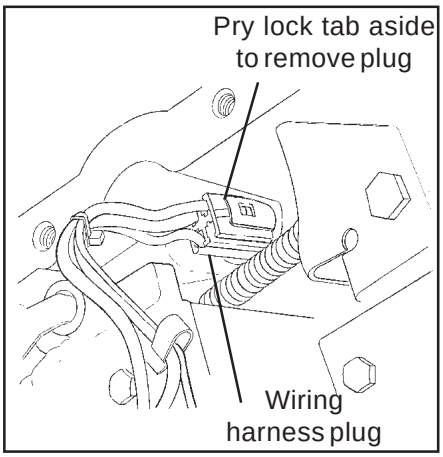

Figure 3

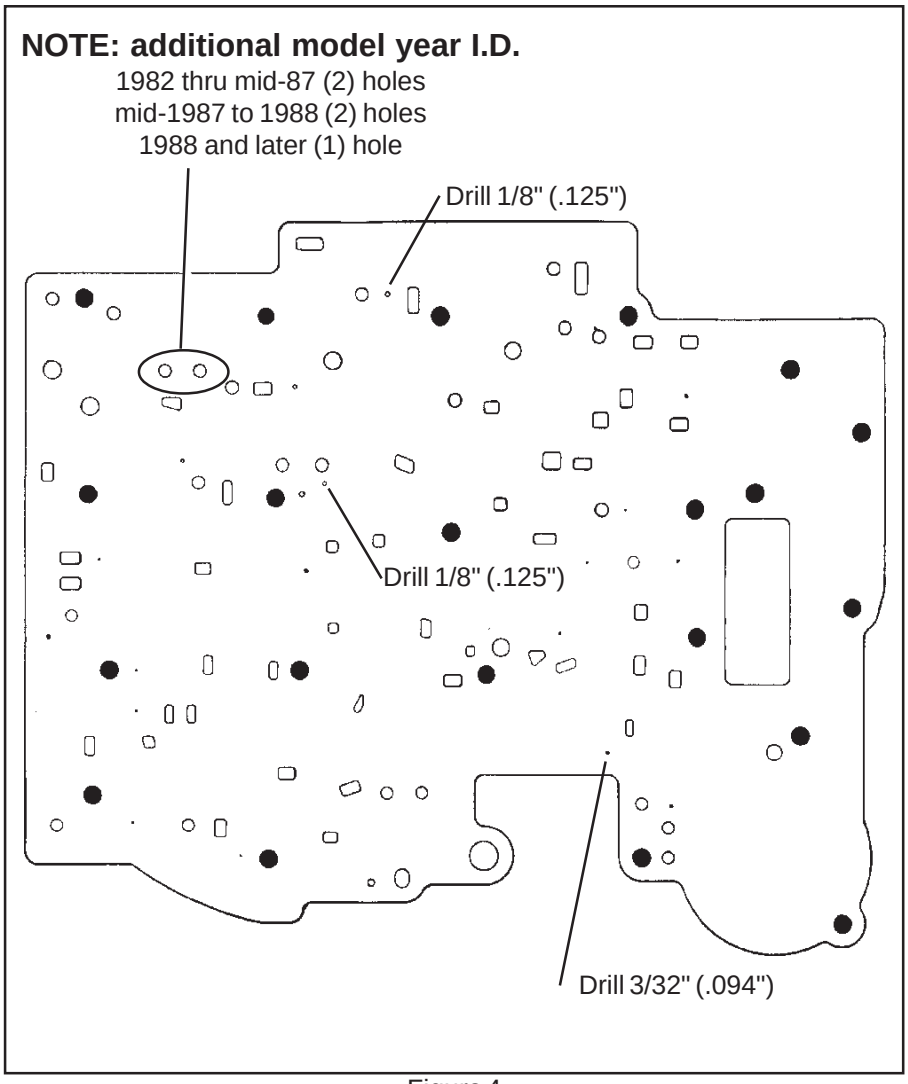

Figure 4

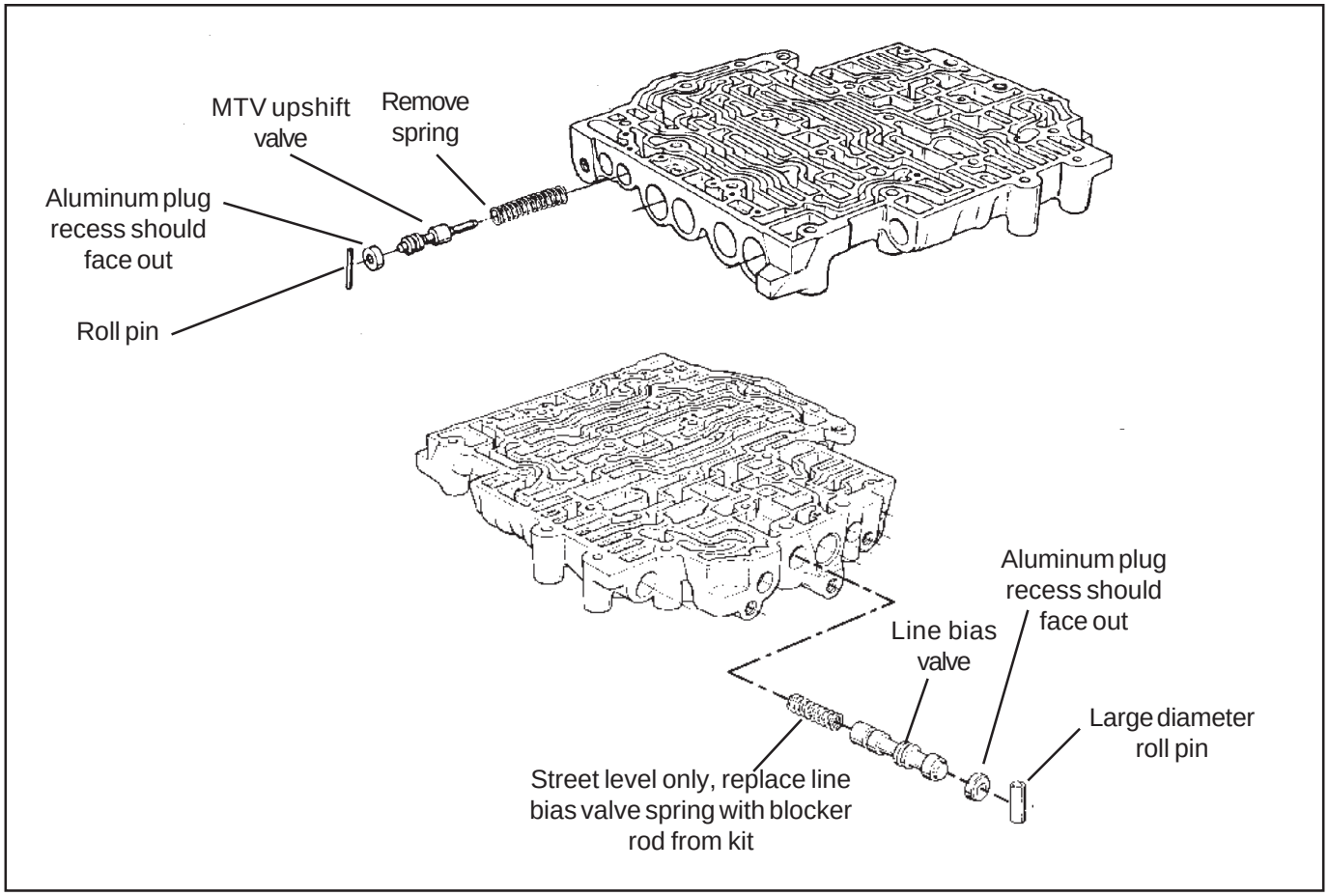

Figure 5

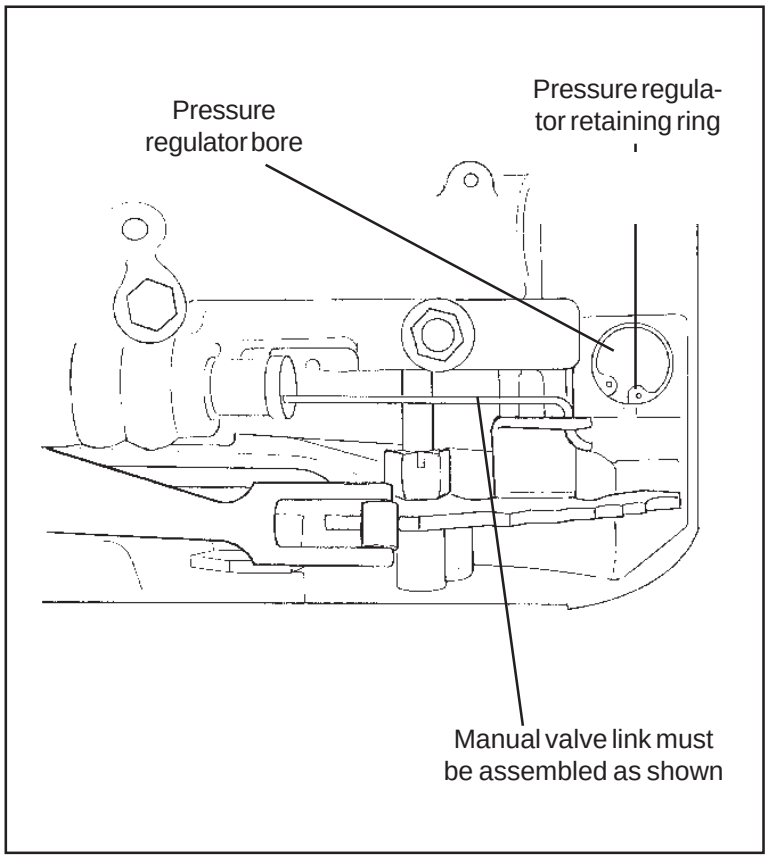

Figure 6

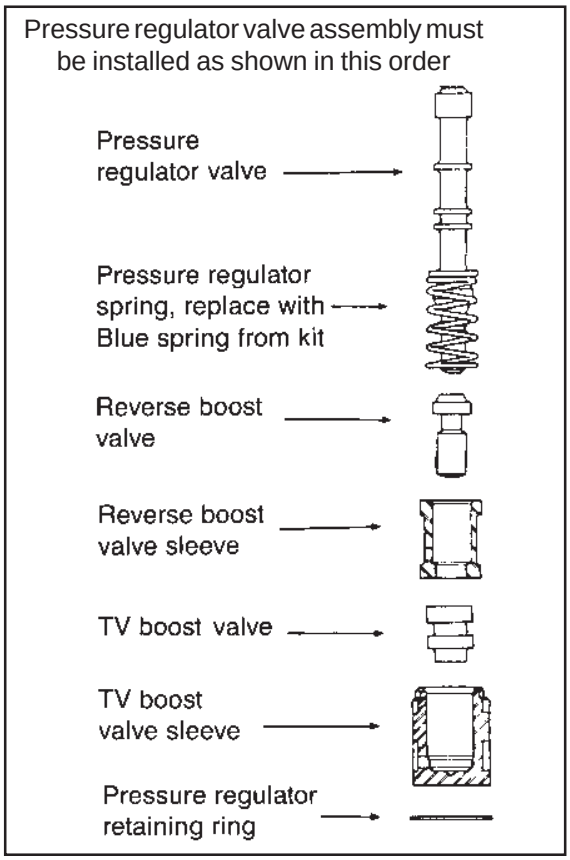

Figure 7

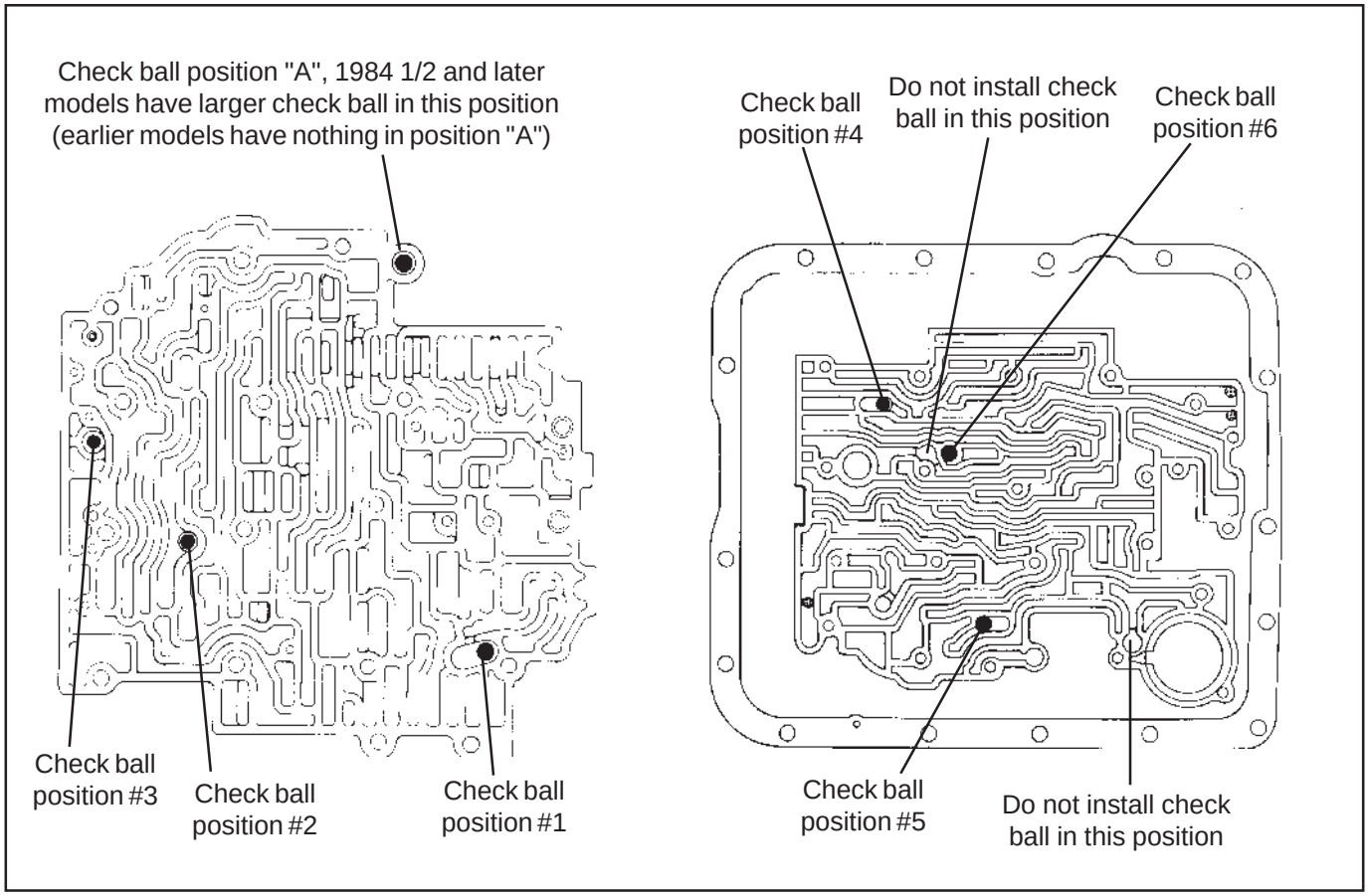

Figure 8 - Transmission without auxiliary valve body (Before mid-1987)

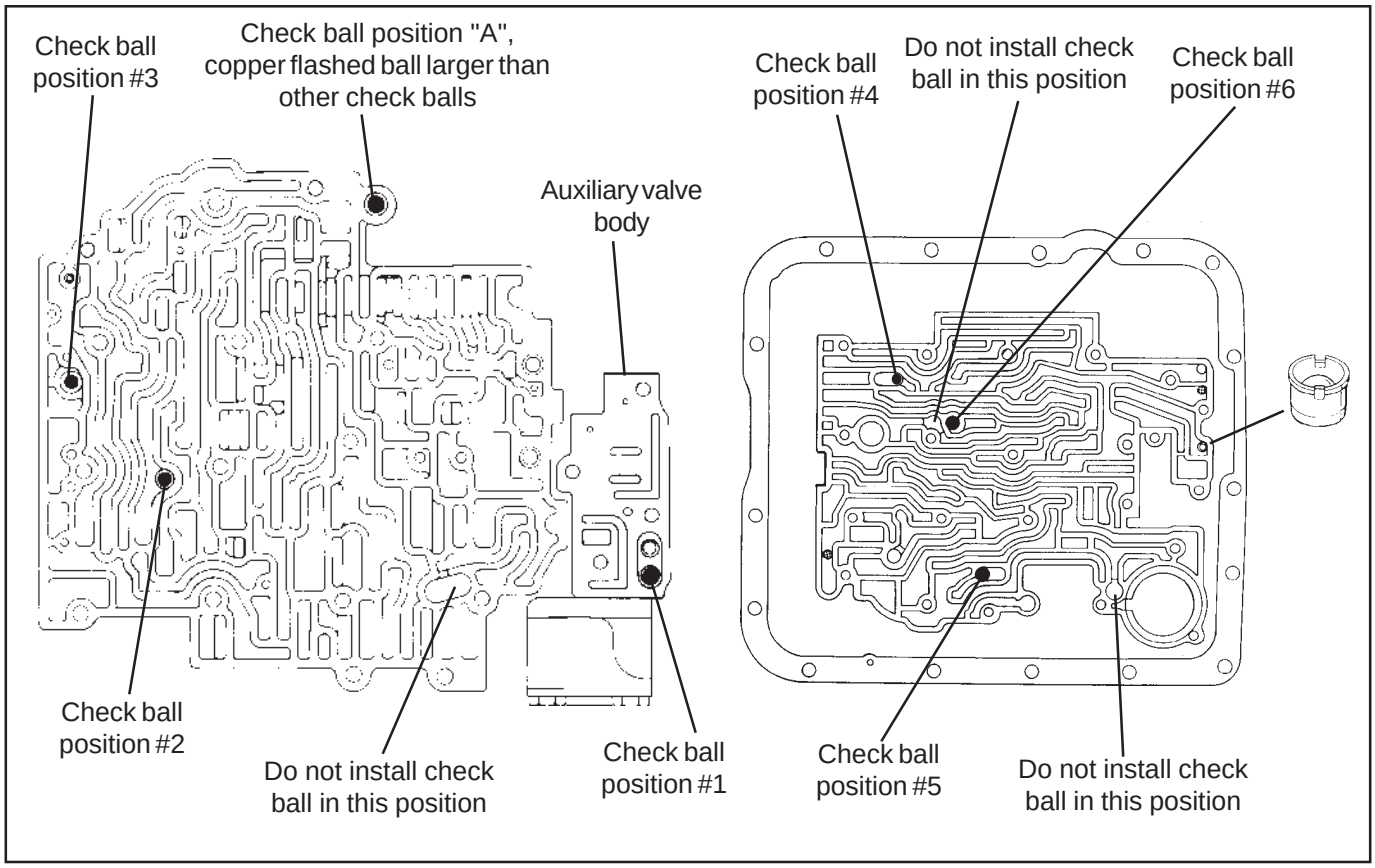

Figure 8A - Transmission with auxiliary valve body (mid-1987 to 1988)

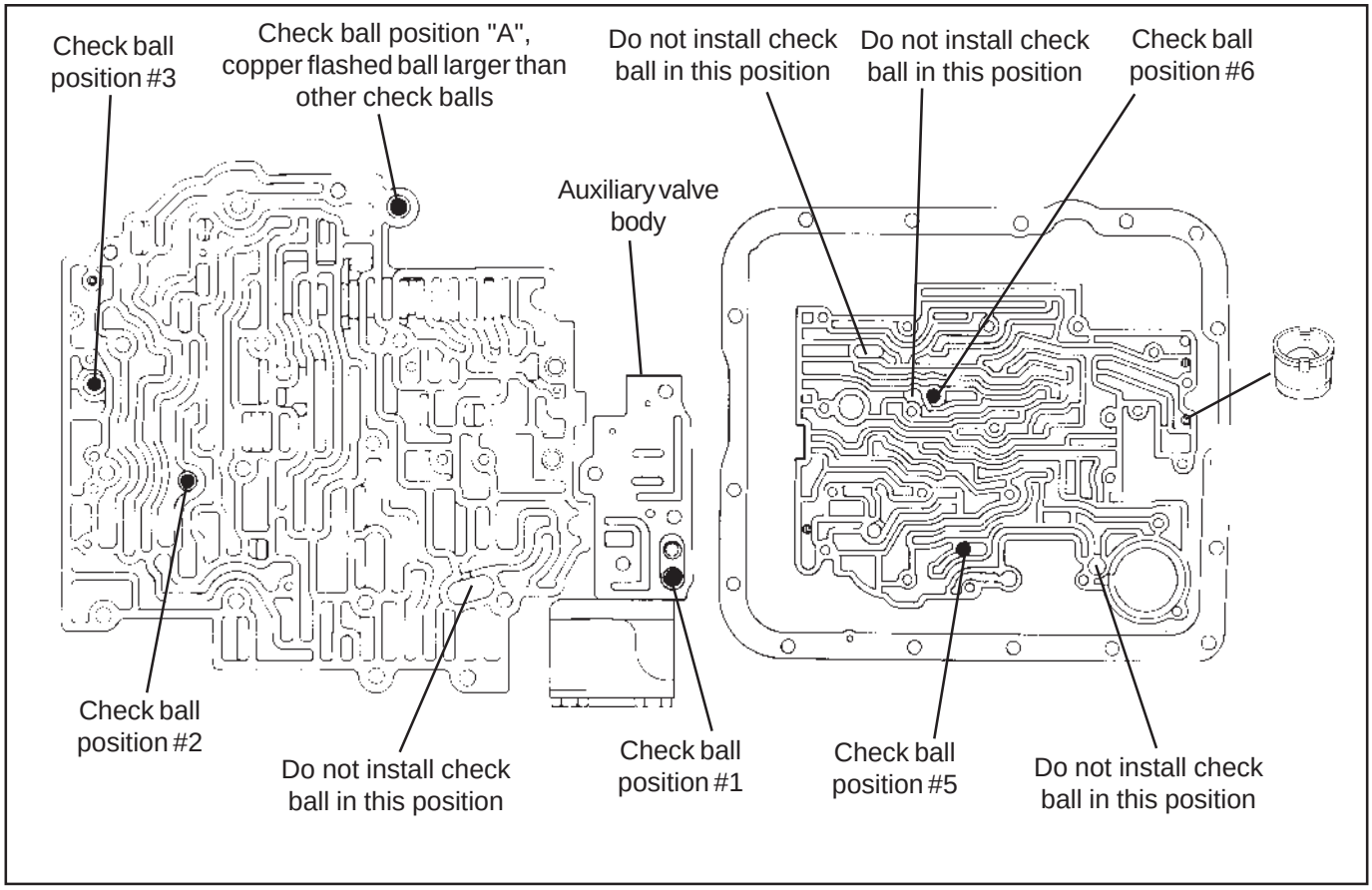

Figure 8B - Transmission with auxiliary valve body (1988-92)

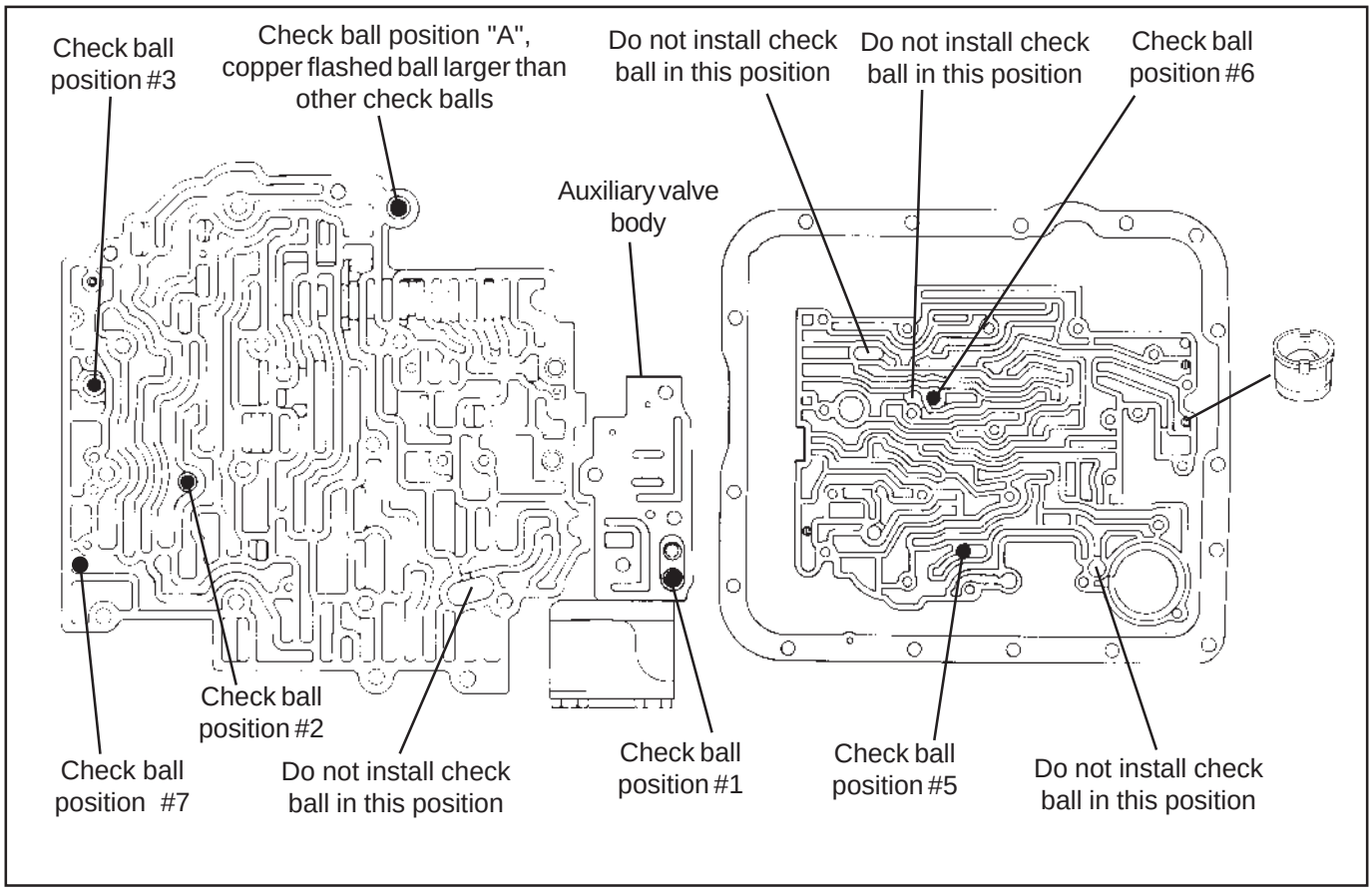

Figure 8C - Transmission with auxiliary valve body (1993)

ASSEMBLY

STEP 11. **Heavy Duty and Street; Check ball placement (See Fig. 4, 8, 8a, 8b and 8c.)** Place check balls in the valve body, auxiliary valve body and case in the positions shown. Use a dab of grease or petroleum jelly to hold check balls in position. Beginning mid 1984 model year TH-700's have a check ball which is larger than the others in the valve body position **'A'**. If your transmission is equipped with this check ball replace it in position **'A'.** If your transmission does not have this check ball then place **nothing** in position **'A'**, pre mid 1984 transmissions were not equipped with a check ball in this position.

STEP 12. Place the new separator plate gaskets on the separator plate **(See Fig. 9.)** Use a dab of grease or petroleum jelly to help hold the gaskets to the plate. The gasket with the **'C'** cut in it goes next to the **case** and the gasket with the **'V'** cut in it goes next to the **valve body**. Make sure no holes in the separator plate are **covered** by the gasket.

If your gaskets become damaged anytime during the installation of the kit, **replace them.** If you cannot obtain **B&M** replacement gaskets then purchase OEM gaskets for your **specific** year and model vehicle.

STEP 13. Heavy Duty Only; Place the 3-4 accumulator pin in the case. Over the pin place the **RED** (3/8") spacer sleeve, accumulator piston and spring (spring is installed at step 17.) Use a dab of grease or petroleum jelly to hold components in place **(See Fig. 10)** Proceed to step **15**.

STEP 14. Street Only; Place the 3-4 accumulator pin in the case **(See Fig. 11)**. Place the **BLUE** (3/4") spacer and accumulator piston over the pin, using a dab of grease or petroleum jelly to hold them in place.

STREET LEVEL ONLY, 1-2 and 3-4 Accumulator assembly note: With piston and spacer(s) installed in bore rub a straight edge on the case surface across the accumulator bore and verify the piston does not extend beyond the case surface. If the straight edge contacts the accumulator piston, grind or file a small amount from the spacer until the piston clears the straight edge. Proceed to step **16**.

STEP 15. Heavy Duty Only; Remove the spring and piston from the 1-2 accumulator housing **(See Fig. 10.)** Install over the pin the **YELLOW** spacer, piston (notice orientation) and spring. Proceed to step **17**.

STEP 16. Street Only; Remove the spring and piston from the 1-2 accumulator housing **(See Fig. 12.)** Install both the **BLUE** and the **RED** spacers over the pin, then the piston (notice orientation.) No spring is used for **Street** level performance.

STEP 17. With the 3-4 accumulator components and case check balls in place, place the separator plate / gasket assembly up to the case followed by the 1-2 accumulator housing assembly. Carefully line up the gaskets and install three accumulator housing bolts, tighten **ONLY** finger tight **(See Fig's. 2, 10 and 11.)**

STEP 18. Install the auxiliary valve body (with check ball in correct position) or cover plate using the appropriate screws tightened **ONLY** finger tight **(See Fig's. 2 and 8.)**

STEP 19. Valve body installation. Make sure check balls are in proper locations. Position the manual valve so the link rod can be engaged **(See Fig. 6.)** The link rod must be placed into the hole of the manual rod at a right angle, then rotated to allow the valve to enter the valve body bore. Do not force the valve at any time. When the valve is fully engaged, align the valve body and case holes then install one bolt finger tight to hold valve

Separator plate gaskets

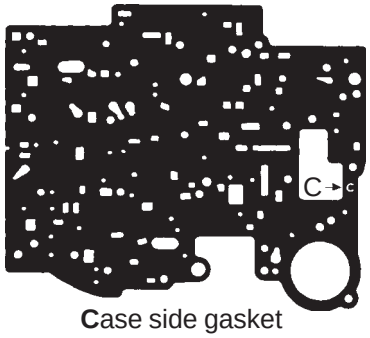

Case side gasket

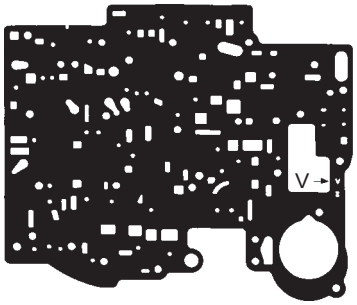

Valve body side gasket

Figure 9

Accumulator spacer placement for **Heavy Duty level**

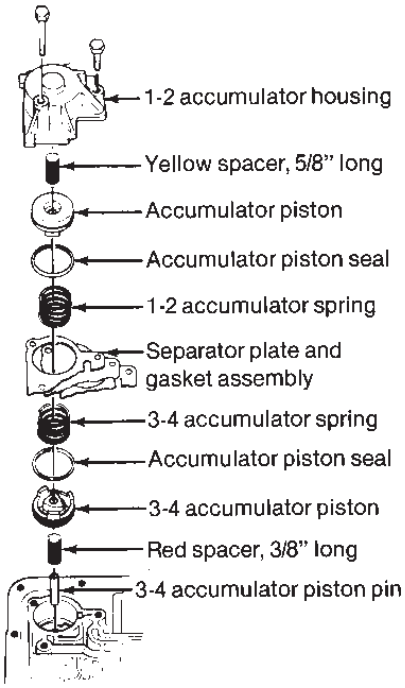

Figure 10

Accumulator spacer placement for **Street Level**

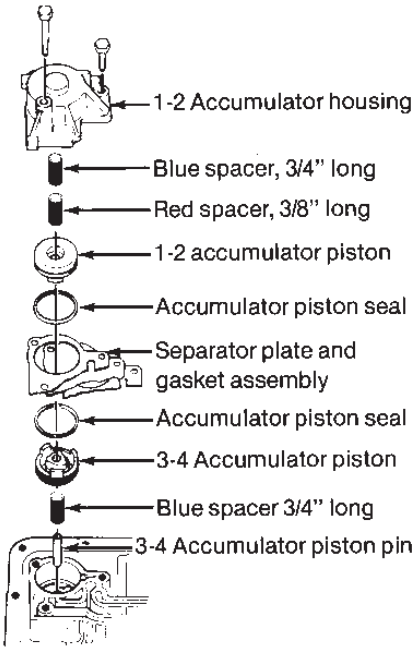

Figure 11

body in place. Engage all of the remaining bolts to finish lining up the separator plate and gaskets **(See Fig. 2.)** Tighten all the valve body, auxiliary valve body (or cover) and accumulator bolts **(except cross over tube clamp bolts and throttle valve linkage bolts)** to 11 NM (8 Lb. Ft.) **Avoid striped threads, Do not over tighten bolts.**

STEP 20. Install the throttle valve (TV) linkage onto the valve body as shown **(See Fig. 12.)** Engage the cable link with the large lever first. Hold the large lever up and the smaller one down. Then slip the assembly into position aligning it with the hold down bolt holes and engage the roll pin in the slot on the bracket. Insert bolts and tighten to 11 NM (8 Lb. Ft.) then make sure large lever operates freely. **IMPORTANT:** The TV cable MUST be reset before operating vehicle refer to step 24.

STEP 21. Carefully insert ends of cross over tube in their respective bores and push them in evenly until fully engaged **(See Fig. 2.)** Install cross over tube bolts and clamps and tighten to 11 NM (8 Lb. Ft.)

Reconnect wiring harness connectors to the terminals from which they were removed. Refer to sketch or notes made at Step 3. Reconnect the harness to the case connector making sure it is firmly seated and locked.

STEP 22. Double check installation;
1: make sure all bolts are installed and torqued.
2: Throttle valve linkage operates freely.
3: Wiring properly connected.
4: Regulator valve retaining ring fully seated in groove. **(See Fig. 6)**.

Coat the filter pickup tube seal with clean ATF then push the filter tube into the pump bore until it is fully seated. Install filter retainer clip so it is located at the small depression on the top side of filter housing **(See Fig. 2)**.

STEP 23. Remove any old pan gasket material from pan and case pan rail. Clean inside of pan with solvent. You may want to install a **B&M** Drain plug kit **(80250)** at this time. Install the new pan gasket on the pan and align the holes. Use grease or petroleum jelly to help hold the gasket in place during installation of pan. **Do not use any gasket sealer or silicone compounds.** To prevent premature band failure make sure the Servo Vent hole shown in **Fig. 2** is not obstructed. Place pan up to case, align holes and install all bolts finger tight. Tighten bolts to 14 NM (10 Lb. Ft.) Do not over tighten bolts. If the bolts are over tightened the gasket will deform and result in oil leaks.

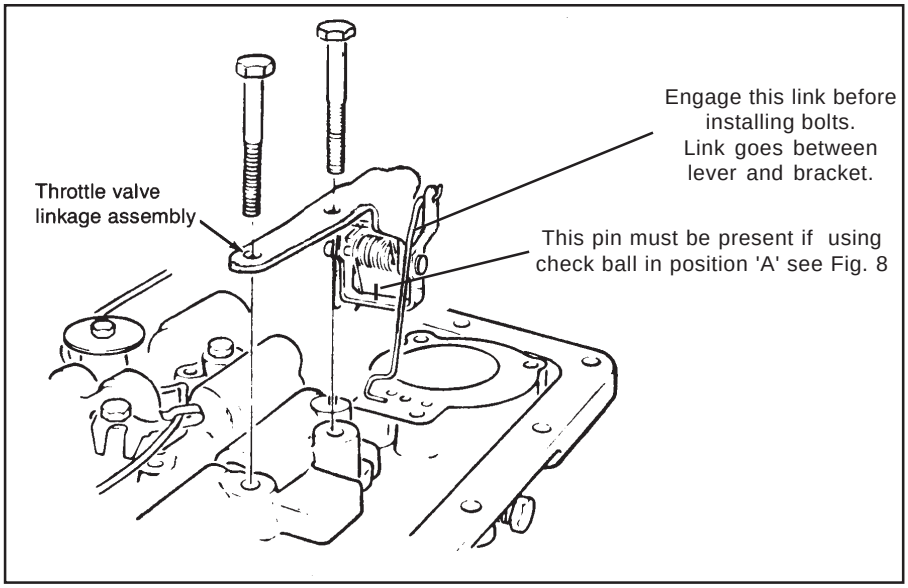

Figure 12

STEP 24. You must reset the TV cable before operating vehicle, Figure 13 shows the correct procedure. Failure to reset the TV cable may result in poor shift quality and/or transmission failure.

STEP 25. Fill transmission with ATF to the full mark on dip stick. You will need about 4 to 6 quarts. Dexron II is fine for **Heavy Duty Level** applications however, we recommend **B&M Trick Shift ATF** for **Street level** applications. With vehicle still off the ground, start the engine and shift transmission through all gears. Check for leaks around oil pan flange and drain plug. Place selector in neutral and check the fluid level. Stop engine and lower vehicle.

STEP 26. Test drive vehicle and recheck for leaks while transmission is hot. Check fluid level again, adjusting level as required.

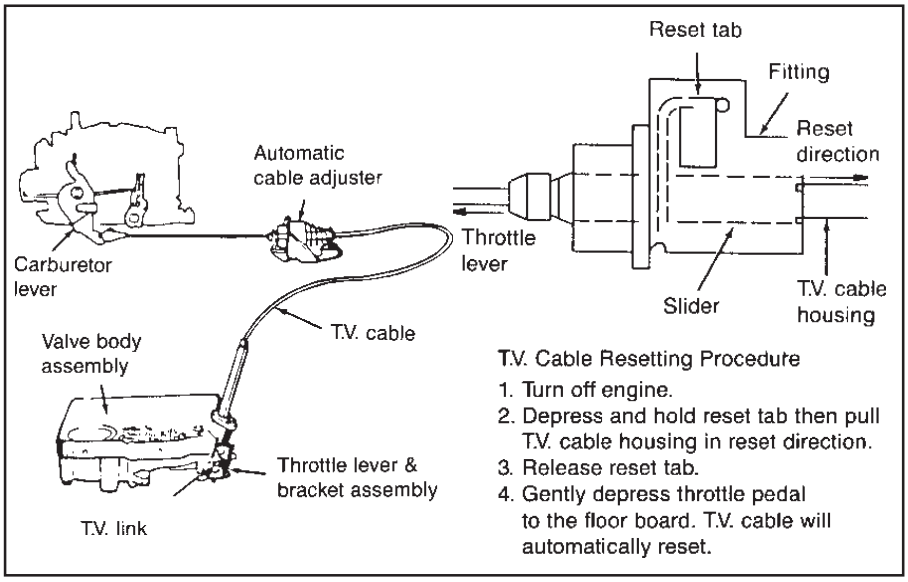

Figure 13

SERVICE

For best performance of your TH-700 we recommend changing both the ATF and filter every 15,000 miles (25,000 km) if the vehicle is driven under one (or more) of the following conditions:

A. High performance applications where the vehicle is regularly driven hard.
B. In heavy city traffic where the outside temperature regularly reaches 90 F (32 C) or higher.
C. In hilly or mountainous terrain.
D. Uses such as taxi, police car or delivery service.

If you do not use the vehicle under any of these conditions, change the ATF and filter every 50,000 miles (80,000 km). It's also a good idea to check the torque converter bolts when servicing the transmission.

Diagnosis procedure

If you experience a performance problem after installing the Shift Improver Kit, it can generally be traced to either an **Improperly set TV Cable** or a **Mis-installed component** in the valve body or pressure regulator. The following procedure along with the trouble shooting guide will assist you to correct the problem.

1. Check and correct ATF level.
2. Check TV Cable adjustment **(See Fig. 13)**.
3. If engine performance indicates an engine tune up is required, this should be completed before road testing or transmission correction is attempted. Poor engine performance can sometimes be mistaken for transmission problems.
4. Check and correct vacuum lines and fittings.
5. Check and correct shifter linkage.
6. Install oil pressure gage and check line pressures. Compare pressures with appropriate values from **Figure 14**.

TOOL LIST

Hydraulic jack
Jack stands or Wheel ramps
Oil drain pan
3/8" drive ratchet wrench
2" extension
8mm, 10mm, 13mm, Sockets
Torque wrench
Internal retaining ring pliers
Needle nose pliers
Gasket scraper
3/8" Drill motor
Fine cut flat file
Wet or Dry sand paper
Grease or petroleum jelly
Small punch or scribe
Small flat screwdriver
Funnel

PARTS LIST

Pan gasket
Upper valve body gasket
Lower valve body gasket
Pressure regulator spring
Retaining ring
Red accumulator spacer
Yellow accumulator spacer
Blue accumulator spacer (2)
Line bias valve blocker rod
3/32" drill
1/8" drill

OIL PRESSURE CHECK PROCEDURE

PRELIMINARY INSPECTION:

*** CHECK AND ADJUST T.V. CABLE**
*** CHECK OUTSIDE MANUAL LINKAGE**
*** CHECK ENGINE TUNE**

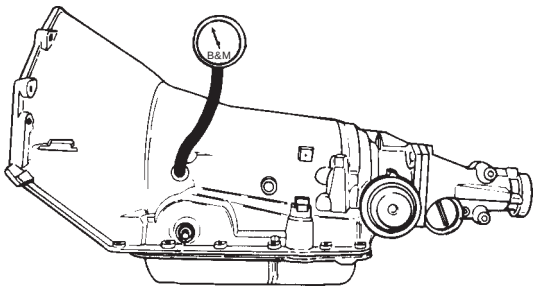

ATTACH PRESSURE GAUGE

CHECK OIL PRESSURE:

*** INSTALL 0-300 PSI PRESSURE GAGE**
*** CONNECT TACHOMETER TO ENGINE**

MINIMUM T.V. LINE PRESSURE CHECK:
With the T.V. Cable properly adjusted and the brakes applied, take the Line Pressure readings in the Ranges and at the engine RPM's indicated in the chart.

FULL T.V. LINE PRESSURE CHECK:
Full T.V. Line Pressure readings are obtained by pulling the T.V. Cable to the full extent of it's travel then take the Line Pressure readings in the Ranges and at the engine RPM's indicated in the chart.

CAUTION: Limit running time at FULL T.V. Pressure to two (2) minutes maximum to prevent over heating.

CAUTION: Brakes should be applied at all times.

TH700 (4L60) TRANSMISSION OIL PRESSURES

RANGE	MODEL	NORMAL OIL PRESSURE AT MINIMUM T.V.		NORMAL OIL PRESSURE AT FULL T.V.	
		kPa	PSI	kPa	PSI
PARK, NEUTRAL, OVERDRIVE, MANUAL 3RD @1000 RPM	ALL MODELS SEE SEE NOTE BELOW	517-586	75-85	1145-1400	166-203
REVERSE @ 2000 RPM	ALL MODELS SEE NOTE BELOW	862-955	100-140	1869-2296	180-340
MANUAL 2ND & MANUAL LOW @ 1000 RPM	ALL MODELS SEE NOTE BELOW	1517-1689	160-295	1517-1689	160-295

NOTE: Oil Pressure at FULL T.V. Pressure depends on the calibration of T.V. Boost valve and Line Bias Valve components originally installed at the factory. The Pressure reading you obtain should be within the range shown.

Normal (or Base) Line Pressure is determined by the Pressure Regulator Spring installed in the unit.
In Neutral, Drive, Drive 3 and Reverse Ranges, Line Pressure increases with increasing throttle opening by action of the T.V. system. Line pressure rise is controlled mechanically by the T.V. Cable which is linked to the Throttle Lever and Bracket assembly attached to the Valve Body.
In Drive2 & Drive1 Ranges, Line pressure is fixed at a constant value by the Reverse Boost valve and does not change with throttle opening.

The Line Pressure tap is located on the left side of the transmission case above the outside Manual Lever.

Figure 14 Oil Pressure Check Procedure

TROUBLESHOOTING GUIDE FOR THE HYDRAMATIC TH-700-R4 TRANSMISSION

SLIPS

Valve body bolts loose
Low fluid level
1-2 and / or 3-4 accumulator seals missing or damaged.
1-2 and / or 2-3 accumulator piston(s) protruding above gasket surface.
Pressure regulator and boost valve assembly improperly installed.
Throttle valve linkage improperly installed.
TV cable not properly set.
Throttle valve sticking.
Misaligned or interchanged valve body gasket.
Filter O-ring damaged or missing.

OVERHEATING, FOAMING OIL AT DIPSTICK OR BREATHER

Oil cooler insufficient.
Oil cooler plugged.
High fluid level.

ERRATIC SHIFTING

Shifter not properly adjusted.
Manual valve not properly engaged.
Low fluid level.
TV cable binding or improperly set.

LATE HARD SHIFTS

Valve body gaskets not positioned properly
TV cable not properly set.

WILL NOT SHIFT

Check balls missing or mis-located.
Governor failure.
TV cable not properly set.

PUMP BUZZ OR WHINE

Low oil level.
Filter tube O-ring cut or missing.
Filter clogged.

SOFT 2-3 SHIFTS

Pressure regulator and boost valve assembly not properly installed.
TV cable not set properly.

WILL NOT MOVE

Check balls missing or mis-located.
Manual valve not properly engaged.
Accumulator piston(s) left out or seals damaged.
Pressure regulator retaining ring did not seat in groove.
Pressure regulator and boost valve assembly not properly installed.

NO CONVERTER CLUTCH APPLY

Voltage not reaching solenoid.
Harness plug not fully engaged.
Connectors not on correct switches.
Wires pinched and grounded out.
Converter clutch valve stuck or sleeve improperly installed.

NO CONVERTER CLUTCH RELEASE

Converter clutch apply valve stuck open.

NO PART THROTTLE DOWN SHIFT

TV cable not set properly.
Throttle valve binding.

NO REVERSE AND SLIPS IN FORWARD RANGES

Pressure regulator valve assembly not properly installed.
Pressure regulator retaining ring did not seat in groove.