PLEASE READ INSTRUCTIONS BEFORE SETTING UP TO INSTALL KIT

Installation Instructions
Shift Improver Kit
1993 to 2001 GM 4L60E

Part Number 70360

(see www.bmracing.com for the latest application and fitment information)

©2006, 2005, 2002 by B&M Racing and Performance Products

Thank you for choosing B&M, The performance company with over 50 years experience designing and manufacturing quality high performance automotive driveline components.

Before proceeding with the installation please read all of the B&M 4L60E Shift Improver Kit installation instructions so you will be familiar with the series of steps required too install this kit. We have made every effort to include more than enough information to assist any-one with minimum mechanical experience to install this kit.

The B&M 4L60E Shift Improver Kit mechanically recalibrates your transmission to produce firm positive shifts, this helps reduce clutch pack heat build up and improves transmission durability. This kit does not change or modify shift point RPM in any range. All transmission shift point RPM and pressure control functions remain under full PCM (Powertrain Control Module) control as they were originally.

No recalibration kit can fix an already ailing transmission. If your 4L60E is slipping, overheating, shifting irregularly or making noise, you should have it repaired before or, in conjunction with the installation of your B&M 4L60E Shift Improver Kit.

General 4L60E Information

B&M's 4L60E Shift Improver Kit was designed to provide firm positive shift quality and improve transmission durability in original vehicle installations and those with moderate engine power improvements. This kit was not de-signed for and is not suitable for all out racing applications. Your 4L60E Transmission is controlled by the (PCM) which has full control of the 4L60E's operation. All of the parameters that control fluid pressures, shift point RPM and TCC (Torque Converter Clutch) lockup speed have been preprogramed into the PCM at the factory. We have designed this kit as an easy way to overcome the less desirable features of the factory calibrated imperceptible shifts. With this kit you can set the shifting characteristics of your 4L60E to one of two levels of performance, Heavy Duty or Street. Heavy Duty level produces a solid, noticeably firm shift when compared to the stock shift feel. While Street level produces a slightly quicker and more aggressive shift compared to Heavy Duty level. After installing the B&M Shift Improver Kit the actual shift feel you get will depend on the factory PCM calibration, Automatic Transmission Fluid (ATF) temperature and the type of ATF you have used. As ATF temperature increases it becomes thinner (less viscous) which allows the fluid to flow faster through small orifices thereby producing faster shift rates. In addition to the effects of temperature, each type of ATF (B&M Synthetic Trick Shift, Dexron III, Mercon etc.) has a specific characteristic friction property. This characteristic friction property is one of the variables that determines shift feel and clutch torque capacity. Dexron/Mercon type ATF's were formulated to produce smooth imperceptible shifts. Both Mercon/ Dexcron III and B&M Synthetic Trick Shift ATF's are suitable for use in your 4L60E transmission. For Maximum performance and positive shift feel we recommend B&M Synthetic Trick Shift ATF.

Printed in the U.S.A.

9500583-04

Special Instructions

Metric tools are required to disassemble and assemble the 4L60E, see tool list at rear of this booklet. Choose a clean, dirt and dust free place to work on your 4L60E. Dirt, loose threads from rags and pieces of old gaskets can become lodged in valve bores and/or separator plate orifices and cause the transmission to malfunction. If you do not have a solvent cleaning setup available, get several cans of WD40 to clean your parts.

Warning: Almost all cleaning solvents pose a threat of fumes and or fire. Make sure to use cleaning solvents only in a well ventilated location away from any source of ignition such as open flames, sparks, hot water heaters, etc.

Be careful with the internal and external wiring harness. Wiring and/ or connectors are easily damaged and difficult to troubleshoot if they are damaged.

VERY IMPORTANT

Use petroleum jelly to hold checkballs and gaskets in place during installation. DO NOT use any kind of wheel bearing grease to hold checkballs in place, these greases do not melt or mix readily with ATF and can block shift and pressure conrol solenoid feed circuit filters and orifices. Causing erratic shifts and potentially serious transmission damage because of low line pressure.

Cautions about PCM.

The MIL (Malfunction Indicator Light or Check Engine Light) may be illuminated (turned ON) if the vehicle is started and any of the transmission electrical connectors are disconnected or has wires that are broken or, have been pinched and/or shorted. The MIL is programmed to illuminate whenever a system (engine or transmission) component malfunctions and at the same time a DTC (Diagnostic Trouble Code) is set in the PCM. You may have to refer to your owners manual, a GM service manual or visit a GM dealer to determine the source of the malfunction(s) that cause(d) any DTC codes to be set and the required remedy. Make sure your engine is in good tune and any problems related to set trouble codes are repaired BEFORE attempting to install your B&M Shift Improver Kit.

Do Not attempt to jumper the Data Link connector to read a DTC from the PCM in 1993 / 1995 vehicles until you have checked your owners manual, or GM service manual, or verified with your GM dealer that the particular PCM in your vehicle allows jumpering the data link. Jumpering the data link connector to read DTC's is not possible on any 1996 or later OBD II vehicle and can damage the PCM and result in a very expensive repair bill. Except for some 1993 to 1995 PCM's all others will require the use of a diagnostic scanner to read. Some DTC codes are "hard codes" and may require a diagnostic scanner to turn them off after the malfunction, which set the DTC, has been repaired.

If electrical power to the transmission is cut or the PCM fails the 4L60E will operate in "limp home" mode, if this happens, you will only have Reverse and Drive 2 range availble.

TRANSMISSION OIL COOLER. We feel that it is very important that every vehicle used in heavy duty or high performance application should have an auxiliary oil cooler. Excessive heat is the primary cause of transmission failures, an and auxiliary oil cooler is an inexpensive safeguard against overheating and failure. B&M offers a wide range of transmission coolers to suit every need and are available at your B&M dealer.

DRAIN PLUG KIT 80250. 4L60E transmission oil pans do not come from the factory equipped with drain plugs. The B&M Drain plug kit is inexpensive and easy to install. It eliminates the mess when changing fluid or on pan removal.

TEMPERATURE GAUGE KIT 80212. Most transmission and converter failures can be traced directly to excessive heat. The B&M transmission temperature gauge can save you a costly repair bill by warning you of an overheated transmission. The B&M temperature gauge comes with all necessary hardware and is easy to install.

Preparation

Automatic transmissions operate at temperatures in the range of 150 and 250 Fahrenheit. We recommend the vehicle be allowed to cool for several hours before disassembly to avoid burns from hot oil and parts.

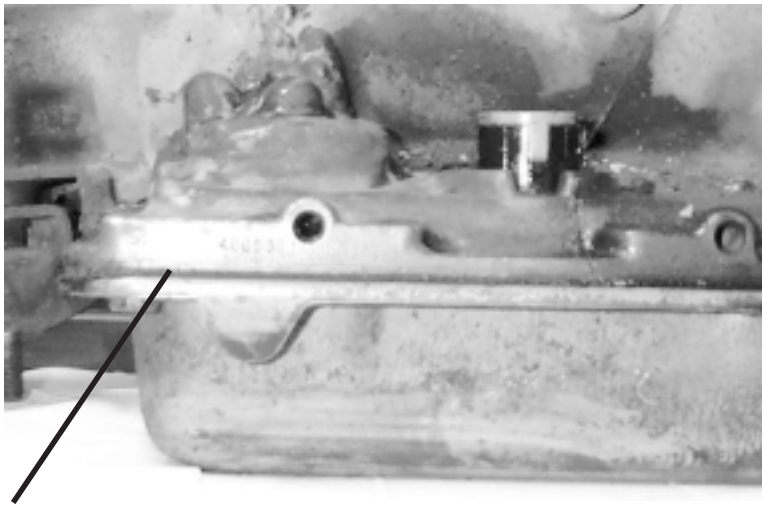

Transmission ID Pad

4 JY D XXXX

Year Model Model designator D=4L60E

F

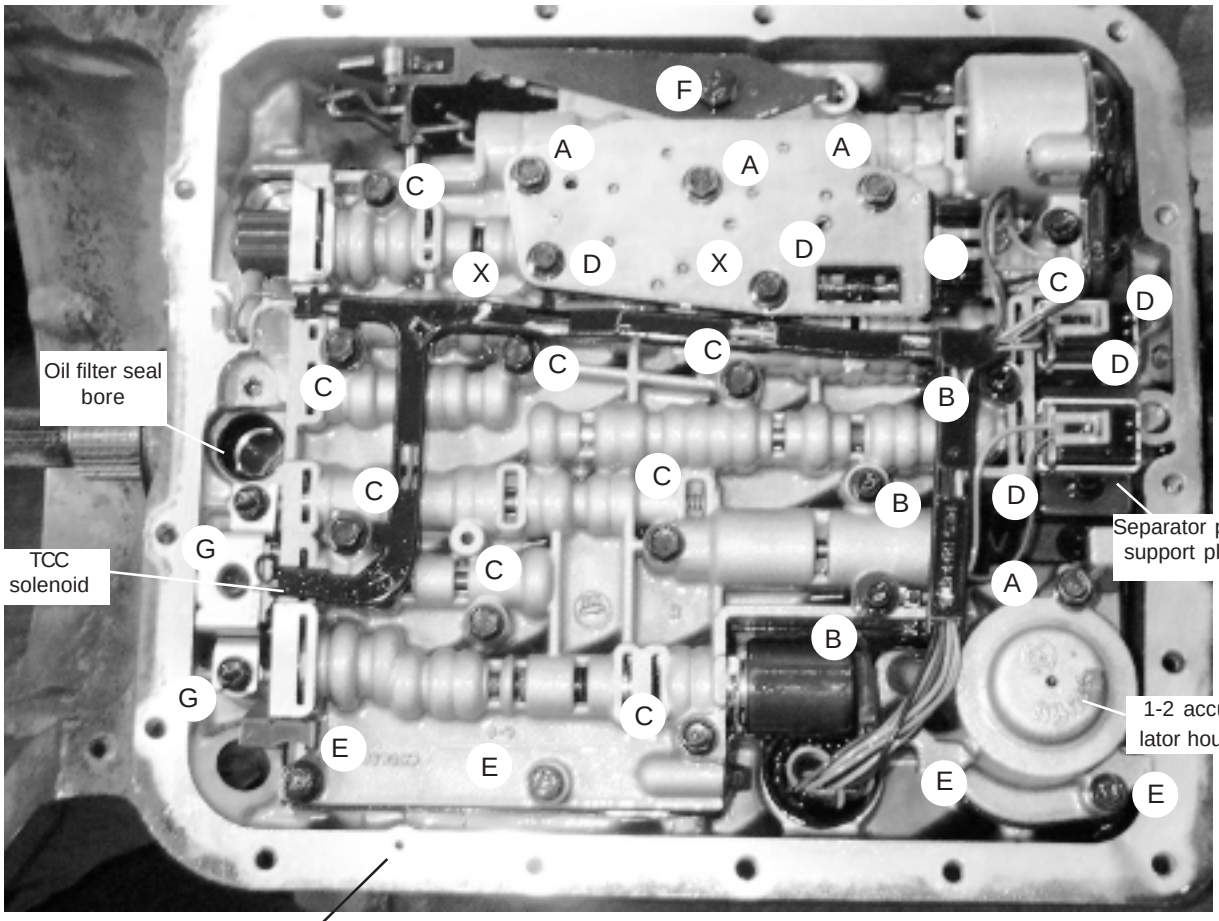

Keep servo vent hole clear.
Avoid using sealer on pan gasket

Not all valve bodies will look exactly like the one show above

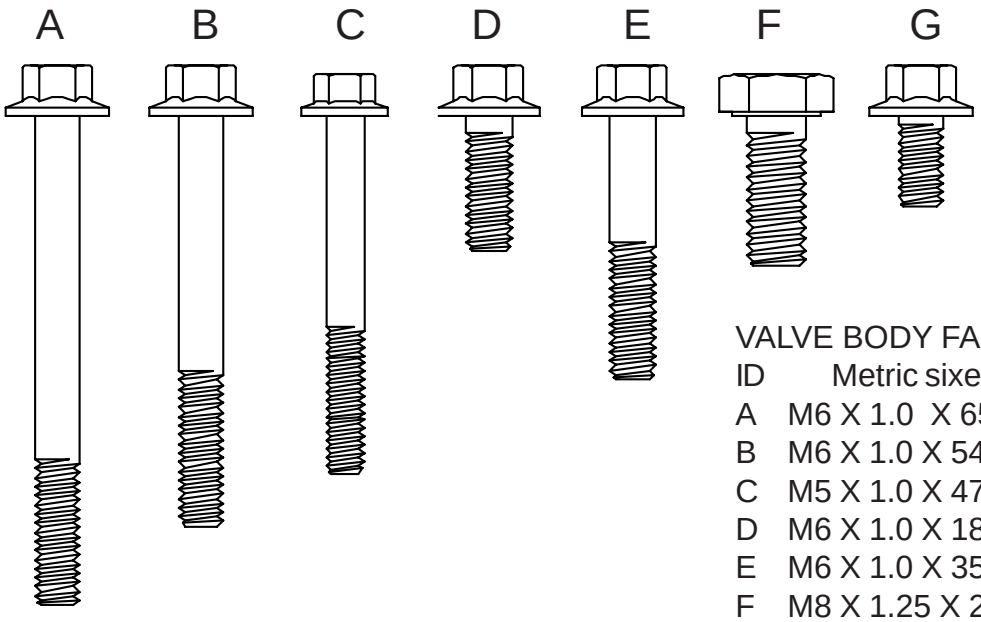

VALVE BODY FASTENERS

ID	Metric sixe	Inch Length	Qty
A	M6 X 1.0 X 65	2.56	(4)
B	M6 X 1.0 X 54.5	2.14”	(3)
C	M5 X 1.0 X 47.5	1.87”	(9)
D	M6 X 1.0 X 18.0	0.71”	(5)
E	M6 X 1.0 X 35.0	1.38”	(4)
F	M8 X 1.25 X 20.0	0.79”	(1)
G	M6 X 1,0 X 12.0	0.47”	(2)

The vehicle should be raised so there is at least 2 feet ground clearance for ease of installation and safety.

MAKE SURE THE VEHICLE IS RIGIDLY AND SECURELY SUP-PORTED, JACK STANDS, WHEEL RAMPS OR A HOIST WORK BEST, DO NOT USE JACKS ALONE.

Have an oil drain pan ready to catch oil and a tray on which to put small parts so they won't get lost.

It can never be said enough: Make sure you have a clean, dust free place to work. Burrs and dirt are the number one enemies of an automatic transmission. Contamination in the valve body or pressure regulator valve train can result in serious transmission damage and/or unpredictable operation. Transmission components are precision fit, work slowly and do not force any parts.

This kit contains all parts necessary to obtain two different shift feel levels of performance depending on the intended use:

1. Heavy Duty level; Towing, campers and, 4-wheel drive vehicles. Shift feel is firm and positive.
2. Street level; Dual purpose performance vehicles, street and strip performance cars. Street level produces the firmest shift feel.

Disassembly

STEP 1. Position your drain pan under the transmission to catch ATF. Remove oil pan by first removing rear pan bolts, then work towards the front. Loosen but do not remove the three front bolts. If the pan sticks to the gasket, insert a flat screwdriver between the pan and case and pry down gently to break pan loose. Now slowly back out the front three bolts to permit draining the ATF. Remove pan gasket material from pan and case flanges.

STEP 2. Remove oil filter from case by gently pulling it straight down. If filter is clogged or if transmission has over 50,000 miles on it, the filter and filter seal should be replaced.

STEP 3. There are several different wiring harness configurations used on the 4L60E. Before proceeding further, make a sketch and some notes describing your particular unit, re-cording which connectors go to which solenoid (See Fig. 2). Notice how the connectors and wires are color coded. Remove connectors from pressure switch assembly and solenoids then tie the wires up out of the way.

STEP 4. Remove all except the center valve body bolt and the 2 pressure switch bolts marked X (See Fig. 2) If you do remove all five bolts from the pressure switch, be sure to recover all 5 switch assembly O-ring seals as it is removed. Hold the valve body firmly with one hand and remove the remaining bolt slowly. Notice how the Manual Valve Link is engaged to the Manual Valve as you remove the valve body from case. There are seven check balls in the valve body along with several pints of oil. Have your drain pan ready to catch the oil and check balls (should they fall out). Save all the check balls in a secure place where they won't get lost.

STEP 5. Remove the separator plate support plate. Remove the 1-2 accumulator housing while holding the separator plate up to the case. Then slowly lower the separator plate and retrieve the check ball located above the plate. Important: Make a note of the color and location of the 1-2 and 2-3 accumulator springs for correct reassembly (See Fig's. 7-10). Remove all old gasket material from separator plate, valve body and case surfaces.

STEP 6. Remove pin from 3-4 accumulator piston in case. Remove 3-4 accumulator piston from case bore. Remove 1-2 accumulator piston from 1-2 accumulator housing. Be careful not to damage piston seals or scratch piston bores while removing pistons.

Pressure Regulator

STEP 7. Heavy Duty and Street; Remove the snap ring at the end of the pressure regulator bore (See Fig. 3). Use a screwdriver to push against the spring loaded Boost Valve sleeve while removing the retaining ring. Remove Boost Valve Sleeve and Valve and the Pressure Regulator Spring. The Pressure Regulator Valve may fall out but it does not have to be removed. Reassemble the pressure regulator assembly as shown (See Fig. 4) using the GREEN Pressure Regulator Spring from the kit. Use the new retaining ring included with kit. Important: Make sure the retaining ring is fully seated in its groove when assembled. If the retaining ring is not fully seated in its groove, the pressure regulator assembly will blow out of its bore resulting in NO LINE pressure.

Modifications

STEP 8. Carefully remove the snap-in solenoid oil filters from the separator plate. Using the supplied drills, enlarge the holes in your separator plate as shown in (Fig. 5). Before drilling, mark the hole locations and drill size on the separator plate and double check them

against the illustration. Make sure to use the correct drill size specified for

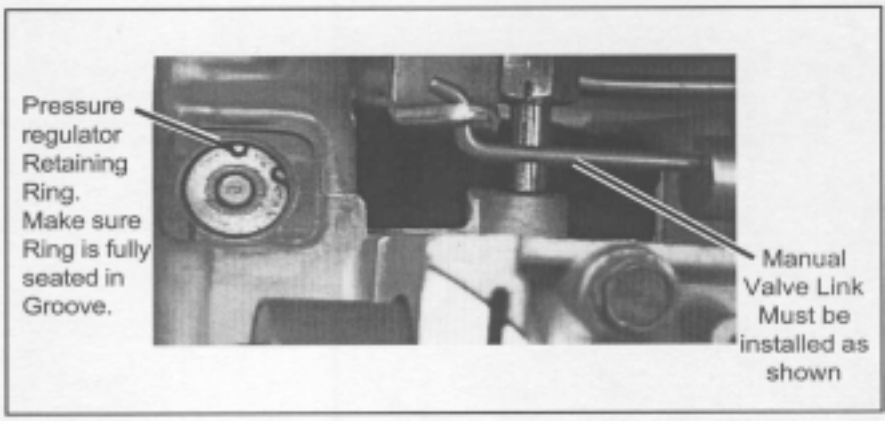

Figure 3.

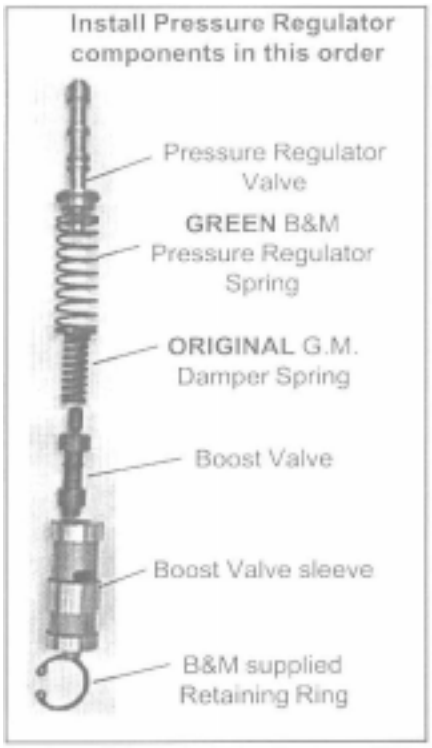

Figure 4

the performance level (Heavy Duty or Street). Remove burrs and clean the separator plate after drilling holes.

STEP 9. Install Aluminum Plug in Separator plate (See Fig. 6). With Plug installed in hole, hold Separator plate parallel to anvil and strike plug squarely with a hammer. Peen plug just enough so it is snug in the hole and will not fall out easily.

Reassembly

STEP 10. Place check balls in valve body and case (See Fig. 12) in the positions shown. Use a dab of petroleum jelly to hold check balls in position. Double check the checkball placement against the provided diagram to prevent misplacement. Improper checkball placement can result in severe transmission damage.

STEP 11. Snap new solenoid filters into separator plate (See Fig. 5). Make sure filters are on the correct side of separator plate, Place each new separator plate gasket on the separator plate and check to make sure no holes in the separator plate are covered by the gasket. Use petroleum jelly to stick gaskets to separator plate during installation. The gasket with the 'C' cut in it goes next to the case and the gasket with the 'V' cut in it goes next to the valve body (See Fig. 11). If your gaskets become damaged anytime during the installation of the kit, replace them. If you can-not obtain B&M replacement gaskets then purchase OEM gaskets for your specific year and model vehicle.

STEP 12. Heavy Duty Level Only; (See Figures 7 or 9) Place the 3-4 Accumulator Pin in the case. Over the pin place the Spacer, 3-4 Accumulator Piston and Stock Spring (spring is installed at step 14). Remove the spring and piston from the 1-2 Accumulator Housing. Over the pin Install the spacer, piston (notice orientation) and spring. Use petroleum jelly to hold components in place. Proceed to step 14.

STEP 13. Street Level Only; (See Figures 8 or 10) Place the 3-4 Accumulator Pin in the case. Over the pin place the spacer and 3-4 Accumulator Piston, using petroleum jelly to hold them in place. Remove the spring and piston from the 1-2 Accumulator Housing. Install both spacers over the pin, then the piston (notice orientation). No 1-2 or 3-4 accumulator springs are used for Street level shift performance.

STEP 14. Make sure the 2-4 Band Anchor has not fallen out (See Fig.

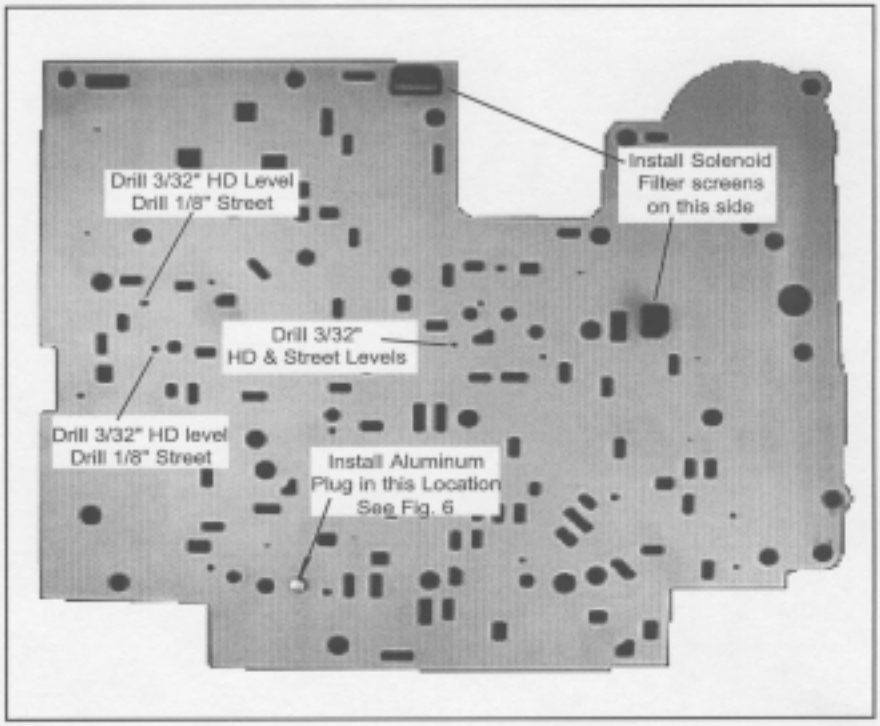

Figure 5. Separator Plate

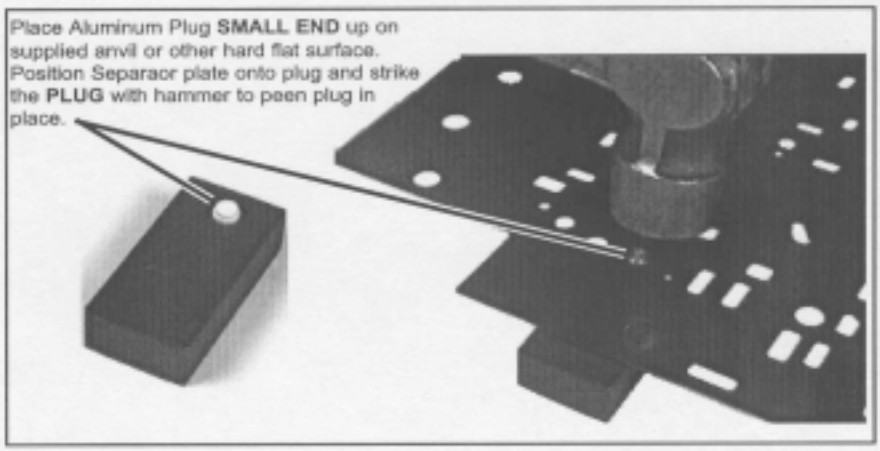

Figure 6. Separator Plate, Aluminum Plug Installation

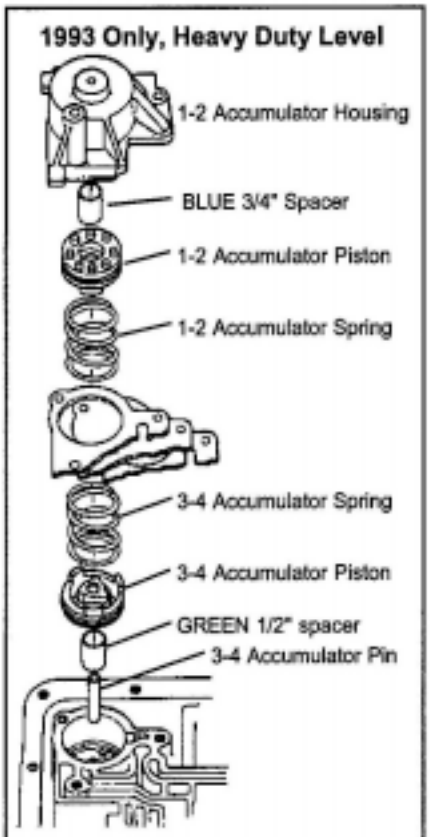

Figure 7. 1993 Accumulators Heavy Duty Level Modifications

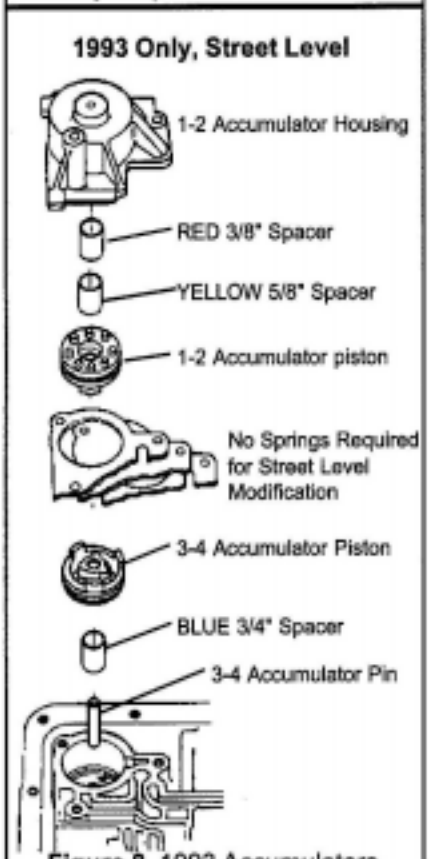

Figure 8. 1993 Accumulators Street Level Modifications

12). With the 3-4 Accumulator components and the case check ball in place, Place the Separator Plate and gasket assembly up to the case followed by the 1-2 Accumulator Housing assembly. Carefully line up the gaskets and install accumulator housing and support plate. Tighten bolts finger tight ONLY (See Fig. 2).

STEP 15. Make sure Valve Body check balls are in correct locations (See Fig. 12). Position the manual valve so the manual valve link can be engaged (See Fig. 4). The manual valve link must be placed into the hole in the manual valve at a right angle to valve axis, then rotated 90 degrees to allow the valve to enter the manual valve bore. Do not force valve or link at any time. When the valve is fully engaged, align the valve body and case holes and install one bolt finger tight to hold valve body in place. Refer to your sketch and notes to properly position wire harness clips and solenoid connectors. Install all of the remaining bolts finger tight to finish lining up the separator plate and gaskets (See Fig. 2). Tighten all the valve body, accumulator and support plate bolts to 11 Nm (8 Lb. Ft.). Avoid striped threads. Do not over tighten bolts.

STEP 16. Double check your installation;

1: make sure all bolts are installed and torqued.

2: Wiring harness is properly connected.

3: Regulator valve retaining ring fully seated in groove. Coat the filter pickup tube with clean ATF then push the filter tube into the pump bore until it is fully seated.

STEP 17. Remove any old pan gasket material from pan and case pan rail. Clean inside of pan with solvent. You may want to install a B&M Drain plug kit (80250) at this time. Install the new Pan Gasket on the pan and align the holes. Use petroleum jelly to help hold the gasket in place during installation of pan. Do not use any gasket sealer or silicone compounds. To prevent premature band failure make sure the vent hole shown in Fig. 2 is not blocked or obstructed. Place pan up to case,

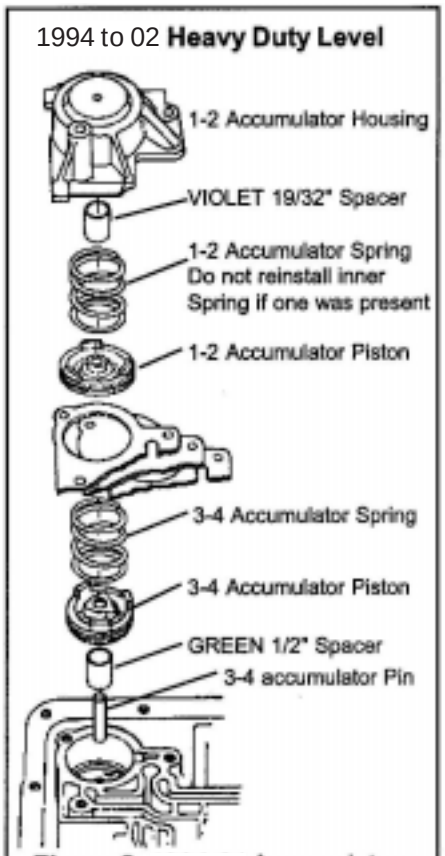

Figure 9. 1994 to 01 Accumulators Heavy Duty Level modifications

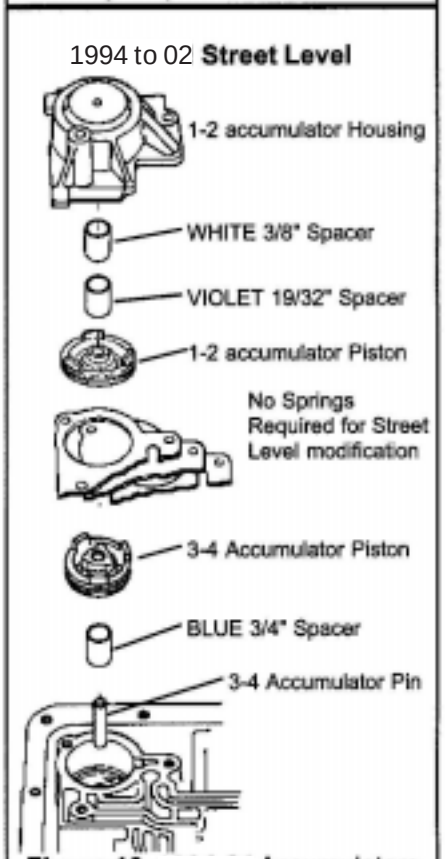

Figure 10. 1994 to 01 Accumulators Street Level Modifications

align holes and install all bolts finger tight. Tighten bolts to 12 NM (9 Lb. Ft.). Do not over tighten bolts. If the bolts are over tightened the gasket will deform excessively and result in oil leaks.

STEP 18. Fill transmission with ATF to the full mark on dip stick. You will need about 4 to 6 quarts. We recommend B&M Synthetic Trick Shift ATF for Heavy Duty and Street level applications. With vehicle still off the ground, start the engine and shift transmission through all gears.

Check for leaks around oil pan flange and drain plug. Place selector in neutral and check the fluid level. Stop engine and then lower vehicle.

STEP 19. Test drive vehicle and re-check for leaks while transmission is hot. Check fluid level again, adjusting level as required.

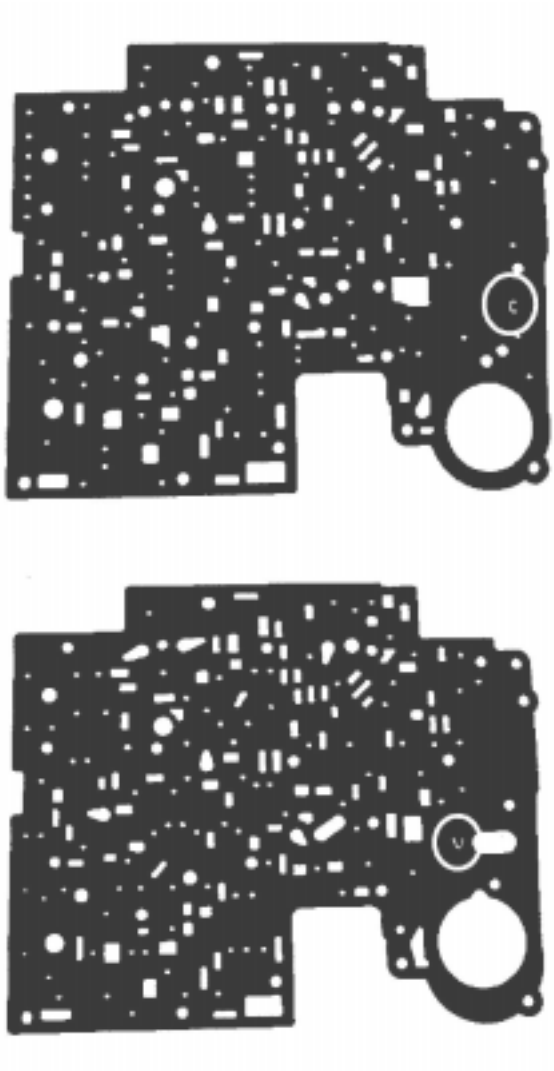

Figure 11. Separator Plate Gaskets

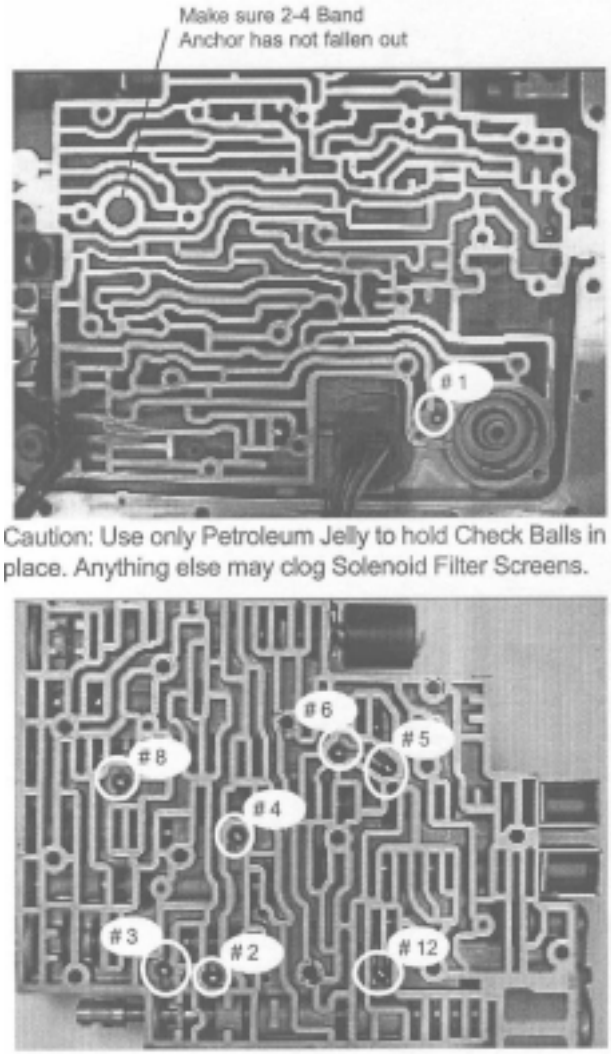

Figure 12. Check Ball Placement

ERROR CONDITION	WHERE TO LOOK FOR CAUSE	
High or Low Oil Pressure	Oil Pump	~ Pressure Regulator Valve Stuck.
		~ P/R Retainnig Ring not fully seated in groove
		~ Orifice hole in P/R Boost Valve sleeve plugged.
	Oil Filter	~ Cracks in Filter Intake Tube.
		~ Intake Tube Seal Damaged.
		~ Wrong grease used on reassembly (clogging filter).
	Valve Body Assembly	~ Spacer Plate or Gaskets misassembled or damaged.
		~ Check Balls omitted or mislocated.
		~ Wrong grease used on reassembly (clogging Solenoid Filter.)
Harsh Shifts	Valve Body Assembly	~ Wrong holes drilled.
		~ Separator Plate or gaskets misassembled or damaged.
		~ Check Balls omitted or mislocated.
Inconsistent Shift Points	Valve Body Assembly	~ Separator Plate or gaskets misassembled or damaged.
	External Linkage	~ Manual Shift Lever Linkage misadjusted.
No or Slips in 1st Gear	1-2 Accumulator	~ Damaged or missing piston seal.
		~ Incorrect spacer(s) holding piston above case surface.
	Low Oil Pressure	~ (See above)
	Valve Body Assembly	~ Spacer Plate or gaskets misassembled or damaged.
		~ Check Balls omitted or mislocated,
		~ Solenoid disconnected or damaged,
		~ 2-4 Band Anchor missing
No or Slipping 2-3 Shift	Valve Body Assembly	~ Spacer Plate or gaskets misassembled or damaged.
		~ Solenoid disconnected or damaged.
		~ Spacer Plate or gaskets misassembled or damaged.
No or Slipping 3-4 Shift	Valve Body Assembly	~ Spacer Plate or gaskets misassembled or damaged.
		~ Solenoid disconnected or damaged.
		~ Spacer Plate or gaskets misassembled or damaged.
	3-4 Accumulator	~ Damaged or missing piston seal,
No or Slipping Reverse	Valve Body Assembly	~ Spacer Plate or gaskets misassembled or damaged.
	Oil Pump	~ P/R Retaining Ring not fully seated in groove.
No TCC Apply	TCC Solenoid	~ Solenoid disconnected or wiring damaged.

TOOL LIST

1	3/8" drive ratchet wrench
1	3/8" torque wrench
1	2"-6" 3/8" drive extension
1	8, 10, 13mm Sockets
1	8, 10, 13mm combination wrench
1	8" Plain Screwdriver
1	Small Internal Retaining Ring Pliers
1	Needle nose pliers
1	Hammer
1	Gasket scraper
1	3/8" Drill motor
1	Fine cut fiat file
1	Wet or Dry sand paper

PARTS LIST

1	Pan Gasket
1	Upper Valve Body Gasket
1	Lower Valve Body Gasket
2	Snap in Solenoid Filters Aluminum Plug
1	GREEN Press Regulator Spring
1	Press Regulator Retaining Ring
1	3/8"x 5/16" ID RED Spacer
1	1/2"L x 5/16" ID GREEN Spacer
1	5/8"L x 5/16" ID YELLOW Spacer
1	3/4"L x 5/16" ID BLUE Spacer
1	19/32"L x 1/4" ID VIOLET Spacer
1	3/8"L x 1/4" ID WHITE Spacer
1	3/32" (.094) Drill 1/8" (.125) Drill
1	1/2" x 1" x 2" Anvil Plate