Installation Instructions
STEALTH PRO RATCHET® SHIFTER

Fits: Ford & Chrysler w/Automatic Transmission
See Application Guide for Specific Vehicles
Catalog # 81120

WORK SAFELY! For maximum safety, perform this installation on a clean, level surface and with the engine turned off. Place blocks or wedges in front of and behind both rear wheels to prevent movement in either direction.

CAUTION: To avoid any possibility of bodily injury or damage to vehicle, do not attempt installation until you are confident that the vehicle is safely secured and will not move.

The B&M Stealth Pro Ratchet Shifter is a full ratchet shifter that performs great, both on the street and on the race track. It will work with most two speed, three speed or four speed automatic transmissions. It has a positive ratchet design so that you will not miss a shift, either up or down. It works with both standard and reverse pattern valve bodies. It has a unique “one hand” reverse lockout feature that meets NHRA and IHRA requirements. You don’t need to use two hands to shift into Reverse.

The supplied B&M Powerglide Pro-Lever is for use with full manual valve bodies or transbrakes applications only.

To use the B&M Stealth Pro Ratchet Shifter with the Ford AOD transmissions you will need the optional accessory kit #40496. To install the B&M Stealth Pro Ratchet Shifter on a 4L60E or 4L65E equipped with a PRNDL switch you will need B&M installation kit #75498, otherwise use supplied GM bracket.

Your B&M Stealth Pro Ratchet Shifter comes equipped with a neutral safety switch, a backup light switch, transmission brackets, levers and a five foot shift cable. Optional shifter cables are also available.

The mechanical components of this shifter are precision made and assembled at our factory. Any modification or disassembly of these parts can cause the shifter to malfunction and will void the warranty. You should disassemble only those items outlined in the instructions.

IMPORTANT

If your vehicle is equipped with a locking steering column; Securing the column lock lever in the engine compartment in the full up position will allow the steering wheel to be locked and unlocked and the ignition key to be removed.

WARNING: This allows the steering wheel to be locked WHENEVER the ignition key is turned to the “lock” position WHILE THE VEHICLE IS MOVING, OR AT ANY OTHER TIME. Securing the steering column lock lever in any other position will both PREVENT the steering wheel from locking and removal of the ignition key.

INSTALLATION

NOTE: If you are installing this shifter with a GM four speed automatic transmission, you must remove the three speed limiter blocker pin and the e-clips indicated in Figure 1. Removing this blocker pin gives the shifter four forward positions rather than three. For Ford AOD four speed automatic transmissions and Chrysler A-500 and A-518 four speed automatic transmissions do not remove this blocker pin, since these transmissions have only three forward positions. Also do not remove the blocker pin and the e-clips for any three speed automatic transmissions. (The three speed limiter blocker pin goes in the upper of the two holes at the rear of the shifter and the two speed limiter blocker pin goes in the lower hole).

If you are installing this shifter with a Ford or Chrysler three or four speed automatic transmission you must install the Park limiter blocker pin and the e-clips as also indicated in Figure 1. This limiter limits the shifter travel into the Park position, so that it does not stretch the cable since Ford and Chrysler transmissions have less travel between Reverse and Park than GM transmissions do.

1. Remove the stock shift linkage;
Column Shifters: Remove all rods, levers or cables from the column and the transmission. Place the column shift lever in the Park position. Remove the pin holding the shift lever in the column and remove the lever assembly. If your vehicle is equipped with a locking steering column, secure the column lock lever in the full up position.

WARNING: This allows the steering wheel to be locked and the ignition key removed WHENEVER the ignition key is turned to the “lock” position WHILE THE VEHICLE IS MOVING, OR AT ANY OTHER TIME.

Console Shifters: Remove the shifter mechanism from the console. Disconnect the rod or the cable from the transmission. Remove the cable bracket if equipped. If there is a cable or linkage from the console shifter or transmission to the steering column lock, it must be blocked in the Park position as described above.

NOTE: Installation of the shifter may require console modification or complete console removal depending on the space available in your vehicle.

2. Pull the carpet, if any, away from the floorboard where the shifter is to be mounted. If the vehicle has a bench type seat, move the seat to the full forward position. Place the shifter on the floor with the stick shifted to the rearmost position. Locate the shifter for ease and convenience of operation. (The rear mounting hole of the mechanism must be at least 1¾” from the front of the seat when the seat is in the full forward position). Make sure the shifter stick clears the dash with the shifter in the forward position. Mark the position of four mounting holes on the floor.

3. Drill four 9/32" mounting holes where marked. Temporarily mount the shifter in place using washers as required to get it level. Mark the location for the shifter cable hole, 3" ahead of the front shifter mounting hole. Drill or cut a 1½” diameter cable hole in the floorboard.

NOTE: Some floorboards are extremely thin and will not adequately support the shifter mechanism when bolted to the floor. For those vehicles we recommend that you fabricate a stiffener plate for additional strength.

4. Install (but do not secure) the carpet back to its original position. Cut holes in the carpet for the mounting holes and a 1½” slit for the cable. DONOT use a drill bit to make the holes in the carpet.

5. Install the cable on the shifter as shown in Figure 1 on page 13. The cable attachment tab should be bolted to the outside surface of the shifter base using the supplied ¼" X ½" bolt, lock washer and nut. Install e-clip to secure the cable.

6. Install the backup light switch and the neutral safety switch in place on the shifter mechanism as shown in Figure 1 on page 13. Install them using the two supplied #4-40 screws, nuts and lock washers. If necessary, bend the fingers slightly so that they engage the slots.

Caution: Overtightening the switch attachment screws will crack the switch housings.

Adjust the switches, so that the neutral safety switch (the lower switch) operates in Neutral and Park only and so that the backup light switch (the upper switch) operates in Reverse only, by loosening the screws and sliding the switches as required. Then retighten the screws.

7. Install the shifter mechanism into the vehicle. Slide the shifter cable through the carpet and the hole in the floorboard. Bolt the shifter down using four ¼" hex bolts and nuts. If required use ¼" washers as shims between the shifter mechanism and the floor to level the shifter. Do not bend the shifter mounting tabs. **ROUTE THE CABLE AS SHOWN IN FIGURE 3, AVOID SHARP BENDS WHICH WILL KINK AND DAMAGE THE CABLE.** Use cable clamps or tie wraps to secure the cable housing to the chassis to avoid contact with hot engine or exhaust system. Seal the cable hole shut to avoid the entry of exhaust fumes or water. For General Motors vehicles go to Step 8, for Ford vehicles go to Step 13, for Chrysler vehicles go to Step 19, for aluminum Powerglide equipped vehicles go to Step 25.

Fig. 3

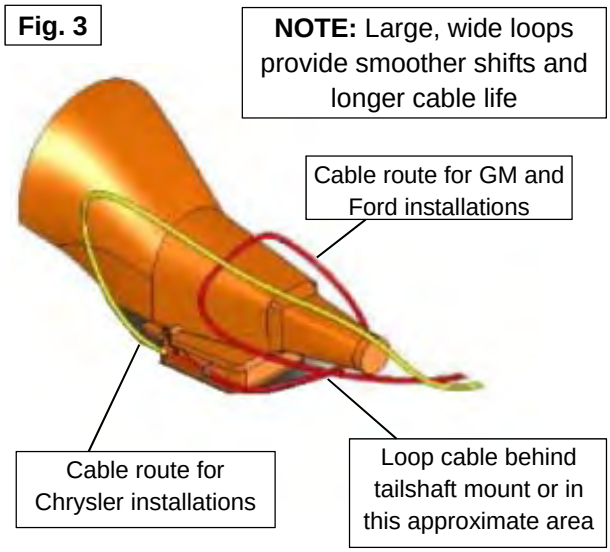

GENERAL MOTORS

8. If you have not already done so, remove the stock selector lever nut and the selector lever from the transmission. Discard the stock lever and the stock shifter linkage. Install the B&M selector lever in position using the stock selector lever nut (See Figure 4 on next page). Torque nut to 23ft.lbs. The lever should move smoothly from front to rear with a positive click in each gear position.

9. Remove the two transmission oil pan bolts from the middle of the left side of the oil pan. Install the cable bracket in position (See Figure 4). The bracket must be installed with two spacers between the pan and the bracket. (If your transmission is equipped with a cast aluminum oil pan, these spacers should be omitted however the cable bracket may have to be modified). Install the two supplied 5/16-18 x 1.00" bolts and tighten to 12-13ft.lbs. Do not overtighten as this can damage the pan gasket.

10. Route the shifter cable according to Figure 3. Avoid kinks and sharp bends and route the cable away from hot engine or exhaust parts.

Remove the two rubber boots, one large nut, and a large lockwasher from the threaded end of the shifter cable. Slide the end of the cable into the cable bracket. Install the large nut and the lockwasher loosely over the end of the cable. Install the two rubber boots onto the end of the cable. Install the swivel on the threaded end of the cable and position it in the center of the threaded portion.

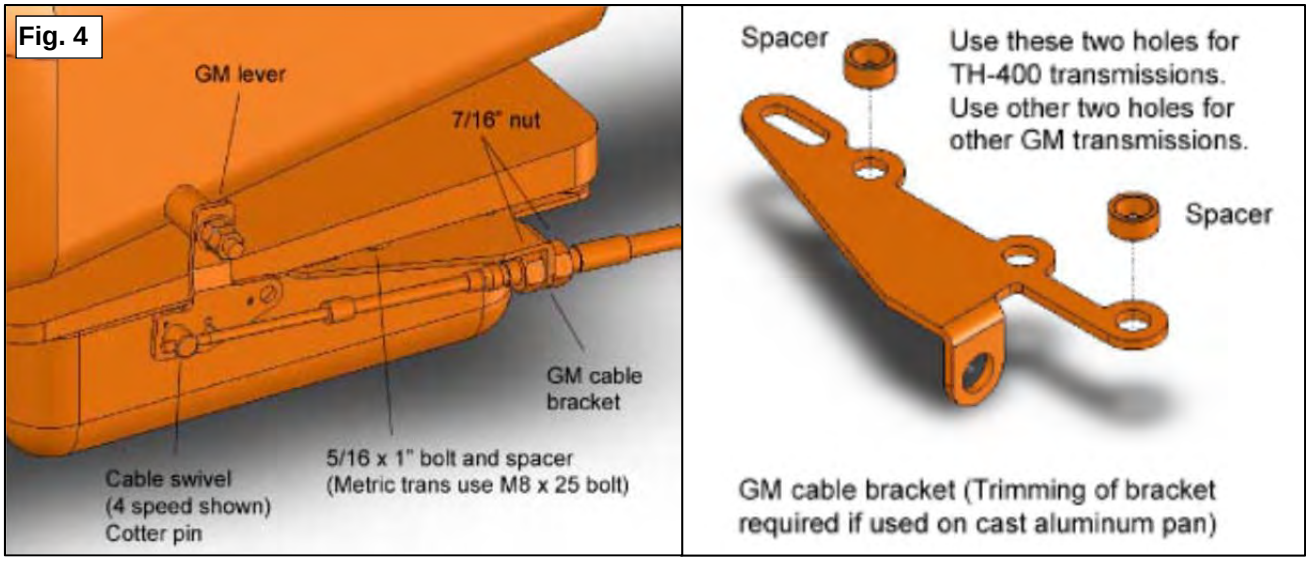

11. If you have a four speed automatic transmission, be sure that you have removed the three speed limiter blocker pin shown in Figure 1. If you have a three speed automatic transmission, the three speed limiter blocker pin and e-clips should be installed. The Park limiter blocker pin and e-clips should not be installed for any GM transmission.

Move the transmission selector lever by hand to the full rear position (Low). Shift the shifter mechanism to the Low gear position (ratcheted all the way back). Adjust the large nuts on the cable so that the swivel will slide into the hole on the selector lever. Tighten the large nuts completely. Be sure that the swivel will slide freely in and out of the hole in the selector lever.

Note: The shifter will not operate correctly unless the correct hole in the shift lever is used as shown here:

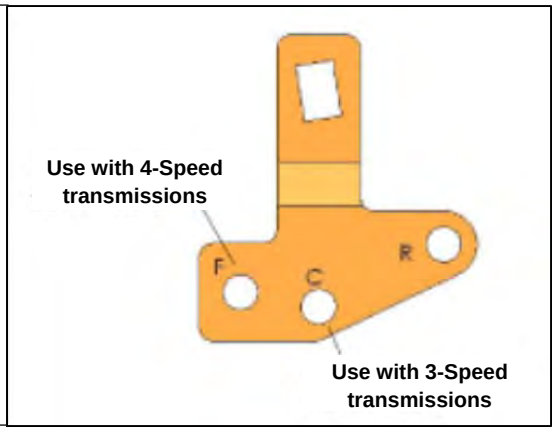

Leave the swivel out of the hole and move the selector lever to Park, all the way forward. Also move the shifter to Park position. (See operation section, page 8). Reinsert the swivel into the hole in the selector lever. Check to see that the swivel will slide freely in and out of the hole in the selector lever in this position. If it does not slip in freely, adjust the swivel slightly until it will slip into the hole in the lever.

Move the shifter back to the Low gear position and check that the swivel will still slide easily in and out of the hole in the selector lever. (If you do not use the hole in the lever, it will be impossible to correctly adjust the cable). Operate the shifter through all the gear positions. Check to make sure the swivel will slide in and out of the selector lever hole in each gear position. The shift cable is now correctly adjusted. Install the cotter key supplied with the shifter into the swivel and spread the key ends.

If you have a problem, ***DO NOT FORCE THE SHIFTER***, this will damage the cable, the shifter or the transmission. Simply start at the beginning and carefully check all your steps.

12. On GM vehicles, the neutral safety/backup light switch may be located on the shifter (steering column or console) or it may be a mechanical interlock in the steering column that prevents the key from turning to the Start position unless the shifter is in the Park or the Neutral position. Identify the type of neutral safety system you have. If the key will not turn to the Start position unless the stock shifter is in Park or Neutral, you have a mechanical interlock, otherwise you have a neutral safety switch. With either type, disconnect the battery ground cable to prevent accidental shorts. If you have a neutral safety switch, locate and identify the neutral safety wires (engine will not crank unless these wires are connected together). Extend the wires from the GM switch to the shifter. Strip a ¼" of insulation off the wires and install the slip-on terminals supplied in the kit. Crimp the terminals onto the wires using a crimping tool or pliers. Connect the neutral safety wires to the **LOWER** switch and the backup light wires to the **UPPER** switch (See Figure 1)**.** Tape the terminal connections and all other connections to prevent shorts.

If you have a mechanical interlock cut the wire that goes from the Start position on the ignition switch to the solenoid on the starter. This wire is usually a 10 or 12 gauge purple wire. Run wires from both ends of the cut wire to the B&M Stealth Pro Ratchet Shifter. Put the slip-on terminals on the ends of the lengthened wires. Crimp the terminals onto the wires using a crimping tool or pliers. Connect the wires to the **LOWER** switch on the shifter. The backup light switch is usually located on the steering column behind the instrument panel. Lengthen these wires and run them to the **UPPER** switch on the shifter. Tape the terminal connections and all other connections to prevent shorts.

Reconnect the battery ground cable, disconnect the coil wire and set the parking brake. Check the switch operation by attempting to start the motor in each shifter position. **The starter must crank only when the shifter is in the Park or the Neutral position**. Check the backup light operation when the shifter is shifted to the Reverse position. Adjust the switches if required. Reconnect the coil wire. Go to Step 37.

FORD

13. If you have not already done so, remove the nut and the lockwasher holding the downshift linkage onto the downshift lever shaft from the transmission. The downshift lever is the outer lever on C-4, C-5 and C-6 transmissions. Pull the lever off the shaft and allow the linkage to hang free. Remove and discard the stock shift linkage rods. Some C-6, late C-4 and all C-5 transmissions have a neutral safety/backup light switch on the transmission shift lever. If your transmission is so equipped, remove the two bolts holding the switch in place and slide it off the shift shaft. Disconnect the switch at the factory plug and discard it.

14. Install the B&M selector lever (See Figure 5 or 6). Note: The B&M lever must point downward for proper operation. If the stock shift lever on your transmission points down, you will have to remove the lower part of the stock arm by cutting it off to clear the B&M lever (See Figure 5). Install the B&M selector lever onto the shift shaft of the transmission. Align the B&M selector lever so when it points straight down it travels equal arcs in both directions from the center, then tighten the ¼”-20 x 1 ½” pinch bolt and the nut. The lever should travel smoothly from front to back with a positive click in each gear position. Make sure the O-ring is in position on the downshift shaft and install the downshift lever in position on the shaft. Install the lockwasher and the nut and tighten securely. The downshift lever must operate smoothly. Reconnect the downshift linkage.

15. Cable bracket installation:

C-4, C-5: Remove the two lower bolts from the rear servo cover. Install the cable bracket in position (See Figure 5). Install the two servo cover bolts as removed and tighten to 12-13ft.lbs. Do not overtighten as this can distort the servo cover.

Fig. 5

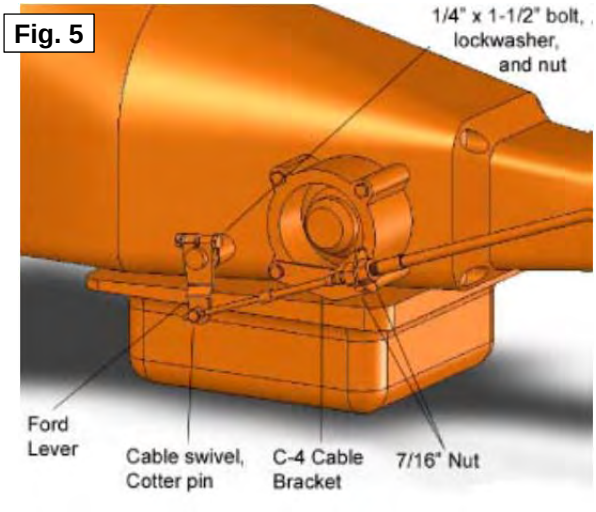

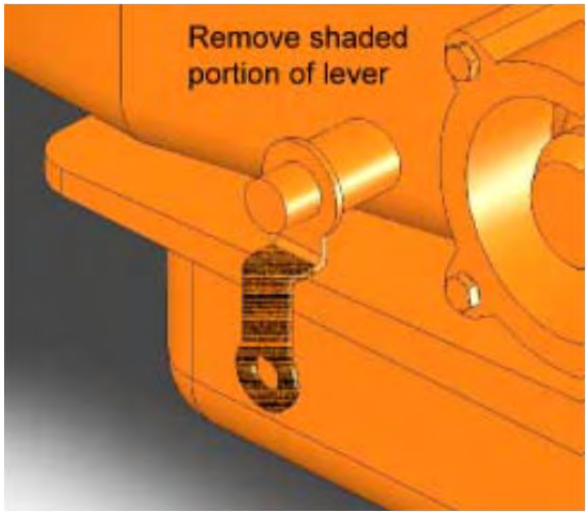

C-6: Remove the two transmission oil pan bolts from the left rear corner of the oil pan. Install the cable bracket into position with the two spacers between the pan and the bracket **(See Figure 6).** (If your transmission is equipped with a cast aluminum oil pan, these spacers can be omitted). Install the two supplied 5/16-18 x 1.00" bolts and tighten to 12-13ft.lbs. ft. Do not overtighten as this can damage the pan gasket.

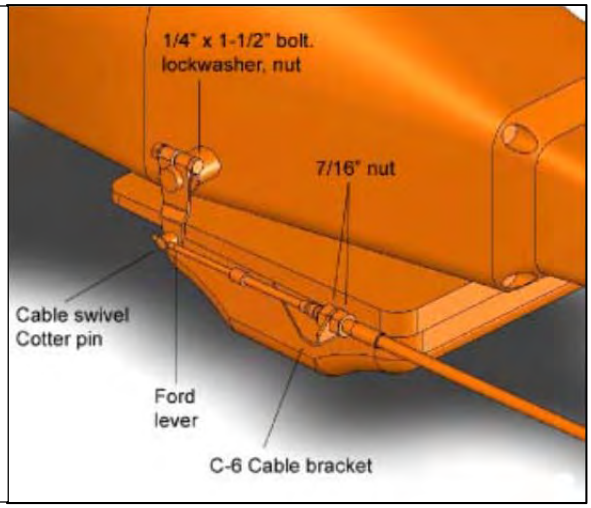

16. Route the shifter cable according to Figure 3. Avoid kinks and sharp bends and route the cable away from hot engine or exhaust parts. Remove the two rubber boots, one large nut, and a large lockwasher from the threaded end of the shifter cable. Slide the end of the cable into the cable bracket. Install the large nut and the lockwasher loosely over the end of the cable. Install the two rubber boots onto the end of cable. Install the swivel on the threaded end of the cable and position it in the center of the threaded portion.

17. Be sure that the Park limiter blocker pin and the three speed limiter blocker pin are both installed as shown in **Figure 1**. The Park limiter will prevent the shifter from additional travel beyond the Ford Park position. (GM transmissions have greater travel between Neutral and Park than Ford transmissions do). The three speed limiter blocker pin is required because all Ford three and four speed automatic transmissions have only three forward gear positions, even the four speed AOD.

Move the transmission selector lever by hand to the full rear position (Low). Shift the shifter mechanism to the Low gear position (ratcheted back until it is stopped by the three speed limiter blocker pin). Adjust the large nuts on the cable so that the swivel will slide into the hole on the selector lever. Tighten the large nuts completely. Be sure that the swivel will slide freely in and out of the hole in the selector lever.

With the swivel in the selector lever, shift the shifter to the Park position, as far forward as the shifter will go without forcing it. (The Park limiter blocker pin will prevent the shifter from moving any further). The shift lever on the transmission should be all the way forward. Check to see that the swivel will slide freely in and out of the hole in the lever in this position. If it does not slip in freely, adjust the swivel slightly until it will slip into the hole in the lever in both Low and Park positions. Operate the shifter through all the gear positions. Check to make sure the swivel will slide in and out of the selector lever hole in each gear position. Install the cotter key supplied with the shifter into the swivel and spread the key ends. Reinstall the downshift linkage, tightening the nut securely.

If you have a problem, ***DO NOT FORCE THE SHIFTER***, this will damage the cable, the shifter or the transmission. Simply start at the beginning and carefully check all your steps.

18. On Ford vehicles, the neutral safety/backup light switch is located on the transmission (or on the steering column on some early vehicles). If the vehicle has an AOD transmission the neutral safety/backup light switches on the B&M Stealth Pro Ratchet Shifter will NOT be used. The neutral safety/backup light switch on the AOD transmission will continue to function normally.

On the C-4 and the C-5 transmissions it is necessary to completely remove the stock neutral safety/backup light switch in order to install the B&M transmission shift lever. On the C-4, the C-5 and the C-6 transmissions, it will be necessary to hook up the neutral safety/backup light switches on the B&M Stealth Pro Ratchet Shifter. Locate and identify the neutral safety (the engine will not crank unless these wires are connected together) and the reverse light wires. Disconnect the battery ground cable before beginning to wire the neutral safety and the reverse light switches. Reroute the wires to the B&M Stealth Pro Ratchet Shifter. Strip a ¼" of insulation off the wires and install the supplied slip-on terminals. Crimp the terminals onto the wires using a crimping tool or pliers. Connect the neutral safety wires to the LOWER switch and the reverse light wires to the UPPER switch (See Figure 1). Tape the terminal connections to prevent shorts. Reconnect the battery ground cable, disconnect the coil wire and set the parking brake. Check the switch operation by attempting to start the motor in each shifter position. **The starter must crank only when the shifter is in the Park or the Neutral position.** Check the backup light operation when the shifter is shifted to the Reverse position. Adjust the switches if required. Reconnect the coil wire. Go to Step 37.

CHRYSLER

19. If you have not already done so, loosen the pinch bolt on the throttle lever on the transmission. This is the lever on the small diameter shaft. Pry the lever off with a screwdriver and allow the linkage to hang free. Remove and discard the stock shift lever and the stock shift linkage. Install the B&M selector lever in position and tighten the pinch bolt securely (See Figure 7). Make sure the lever is not pushed down so far as to touching the transmission case. This will cause the lever to bind on the case. The lever should travel smoothly from front to back with a positive click in each gear position. Install the stock throttle lever into position on the small diameter shaft as removed and tighten the pinch bolt securely. The throttle lever must operate smoothly.

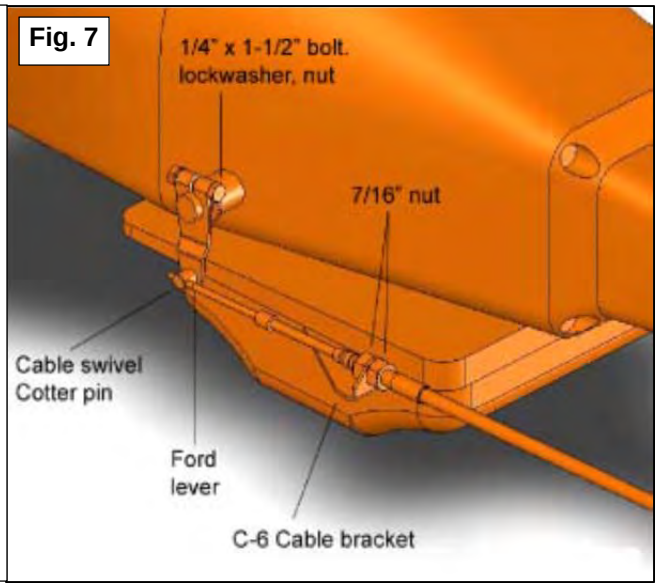

Fig. 7

20. Remove the two transmission oil pan bolts directly below the shift lever. Install the cable bracket into position with two spacers between the pan and the bracket (See Figure 7). (If your transmission is equipped with a cast aluminum oil pan these spacers can be omitted). Install the two supplied 5/16-18 x 1.00" pan bolts and tighten to 12-13ft.lbs. Do not overtighten as this can damage the pan gasket.

21. Route the shifter cable according to Figure 3. Avoid kinks and sharp bends and route the cable away from hot engine or exhaust parts. Remove the two rubber boots, one large nut, and a large lockwasher from the threaded end of the shifter cable. Slide the end of the cable into the cable bracket. Install the large nut and the lockwasher loosely over the end of the cable. Install the two rubber boots onto the end of the cable. Install the swivel on the threaded end of the cable and position it in the center of the threaded portion.

22. Be sure that the Park limiter blocker pin and the three speed limiter blocker pin are both installed as shown in Figure 1. The Park limiter will prevent the shifter from additional travel beyond the Chrysler Park position. (GM transmissions have greater travel between Neutral and Park than Chrysler transmissions do). The three speed limiter blocker pin is required because all Chrysler three and four speed automatic transmissions have only three forward gear positions, even the four speed A500 and A518. Move the transmission selector lever by hand to the full rear position (Low). Shift the shifter mechanism to the Low gear position (ratcheted back until it is stopped by the three speed limiter blocker pin). Adjust the large nuts on the cable so that the swivel will slide into the hole on the selector lever. Tighten the large nuts completely. Be sure that the swivel will slide freely in and out of the hole in the selector lever.

With the swivel in the selector lever, shift the shifter to the Park position, as far forward as the shifter will go without forcing it. (The Park limiter blocker pin will prevent the shifter from moving any further). The shift lever on the transmission should be all the way forward. Check to see that the swivel will slide freely in and out of the hole in the lever in this position. If it does not slip in freely, adjust the swivel slightly until it will slip into the hole in the lever in both Low and Park positions. Operate the shifter through all the gear positions. Check to make sure the swivel will slide in and out of the selector lever hole in each gear position. Install the supplied cotter key with the shifter into the swivel and spread the key ends.

If you have a problem, ***DO NOT FORCE THE SHIFTER***, this will damage the cable, the shifter or the transmission. Simply start at the beginning and carefully check all your steps.

23. Check the operation of the throttle linkage again. The linkage must operate smoothly with no bind. All transmissions using automatic valve bodies must have the throttle linkage connected and operating or transmission damage will result.

24. Neutral safety/backup light switch.
’66-’68: The neutral safety switch will continue to function normally. It will not be necessary to hook up the neutral safety switch wires on the shifter. Disconnect the battery ground cable before wiring the backup light switch. Locate the original backup light switch on the steering column or the console shifter. Run these wires to the UPPER switch on the B&M Stealth Pro Ratchet Shifter (See Figure 1). Reconnect the ground wire and check the light for proper operation. Adjust the switches on the shifter if required.

’69 and Later: The neutral safety/backup switch is located on the transmission and will continue to function normally. It will not be necessary to connect any wires to the switches on the shifter. Go to **Step 37**.

POWERGLIDE

25. Disconnect the throttle to transmission linkage, if any and discard. The Powerglide shift lever supplied with this shifter has no provision for a throttle linkage.

26. Drain the transmission oil pan. **Caution: Be sure the transmission is cool before attempting to drain the oil.** Place a drain pan under the transmission. Remove the drain plug, if so equipped. If your pan does not have a drain plug, remove the oil pan bolts one at a time, working towards the front. As you loosen the last two bolts, the oil pan will tilt down and allow the oil to drain. Note: If your oil pan sticks to the gasket, pry it down with a screwdriver before loosening the last two bolts to break it free. Remove the oil pan and set it aside.

27. Remove the manual valve guide plate by removing the two bolts (See Figure 8 below). Unhook and remove the detent roller spring. Allow the detent roller to pivot out of the way. Note how the pin on the manual valve selector engages the groove in the manual valve.

28. If your transmission has a throttle valve lever on the outside of the shift lever, loosen the inner pinch bolt on the throttle lever. Slide the throttle lever and the shaft out of the transmission. Remove the inner throttle valve lever. Discard these parts.

29**.** Loosen the pinch bolt on the selector lever. This can be an Allen head bolt of a 12 point bolt head. Do not remove the pinch bolt. Slightly pry the manual valve lever and slide the selector shaft from the transmission. Discard the selector shaft.

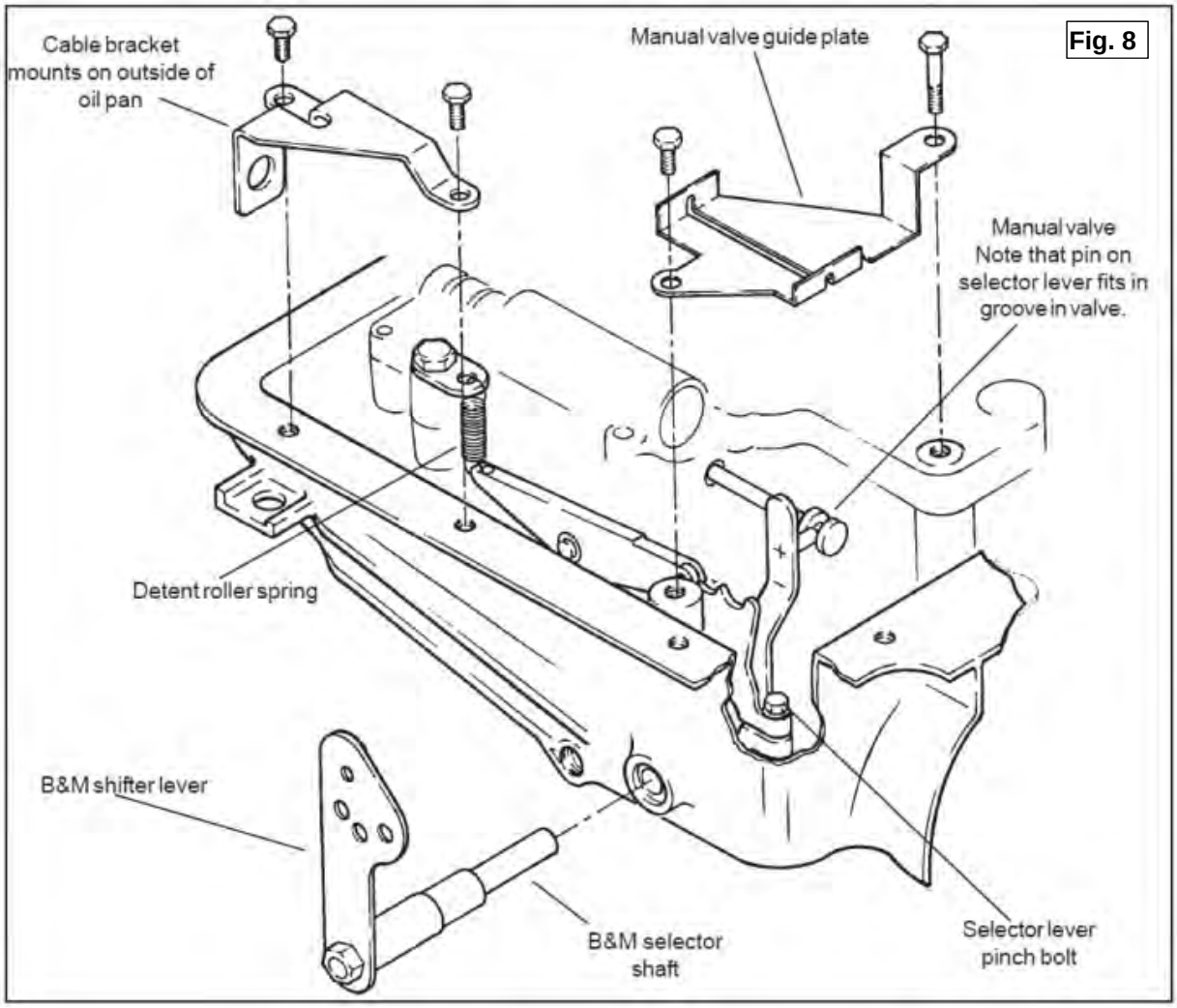

Fig. 8

30. This shifter includes the B&M Powerglide Pro-Lever, which is a two piece lever with a separate lever and shaft. Install the B&M selector shaft into the transmission with the lever pointing down. Hold the stock selector lever in position in the case, engage the pin on the selector lever with the manual valve and rotate the B&M shaft until the flat on the shaft engages the serrations on the lever. Push the B&M lever firmly into the transmission until the lever stops on the shoulder of the shaft. Tighten the pinch bolt securely.

31. Install the manual valve guide plate in place. Make sure that the pin on the selector lever is engaged in the groove in the manual valve. Install the two bolts and tighten to 15ft.lbs. Install the detent roller spring. Hook the spring to the detent roller and the tab. The selector lever must travel freely and smoothly from front to back with a positive click in each gear position.

32. Clean the oil pan and scrape the old gasket off the pan and the case. (Note: if your pan does not have a drain plug, you may wish to install a B&M Drain Plug Kit #80250 at this time). The old gasket can cause leaks. Install the oil pan with a new gasket. Install the pan bolts except for the two center bolts on the left side of the pan. Tighten the pan bolts to 8ft.lbs. Do not overtighten as this can damage the pan gasket.

33. Install the cable bracket into position with the two remaining pan bolts (See Figure 8). Install the B&M lever onto the shaft with the lever pointing down. If your cable comes from the front (usually a rear engine car) the lever is installed pointing upwards. You will have to make your own cable bracket for this installation.

34. Route the shifter cable according to Figure 3. Avoid kinks and sharp bends and route the cable away from hot engine or exhaust parts. Remove the two rubber boots, one large nut, and a large lockwasher from the threaded end of the shifter cable. Slide the end of the cable into the cable bracket. Install the large nut and the lockwasher loosely over the end of the cable. Install the two rubber boots onto the end of the cable. Install the swivel on the threaded end of the cable and position it in the center of the threaded portion.

35. Be sure that the two speed limiter blocker pin and e-clips are installed as shown in Figure 1. The two speed limiter blocker pin is required because the Powerglide has only two forward gear positions.

Move the transmission selector lever by hand to the full rear position (Low). Operate the shifter lever to the Low gear position (ratcheted all the way back). Adjust the large nuts on the cable so that the swivel will slide into the hole in the selector lever that is labeled B&M1(See Figure 9). Tighten the large nuts completely. Be sure that the swivel will slide freely in and out of the hole in the selector lever.
Note: The shifter will not operate correctly unless the B&M1 hole in the shift lever is used.

Fig. 9

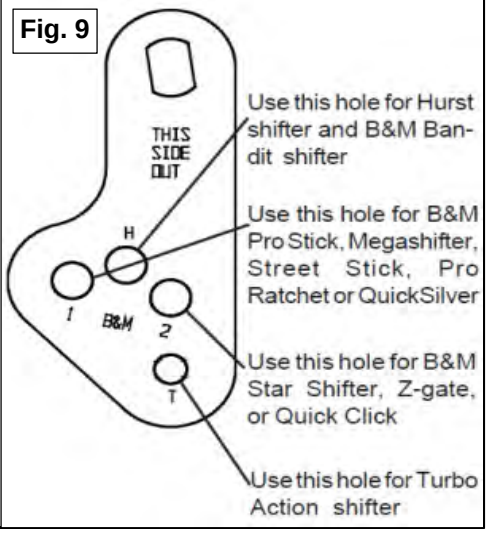

Leave the swivel out of the hole and move the selector lever to Park, all the way forward. Also ratchet the shifter to Park position (all the way forward). Reinsert the swivel into the B&M1 hole in the selector lever. Check to see that the swivel will slide freely in and out of the B&M1 hole in the selector lever in this position. If it does not slip in freely, adjust the swivel slightly until it will slip into the **B&M1** hole in the lever.

Move the shifter back to the Low gear position and check that the swivel will still slide easily in and out of the **B&M1** hole in the selector lever. (If you do not use the **B&M1** hole in the lever, it will be impossible to correctly adjust the cable). Operate the shifter through all the gear positions. Check to make sure the swivel will slide in and out of the **B&M1** selector lever hole in each gear position. The shift cable is now correctly adjusted. Install the cotter key supplied with the shifter into the swivel and spread the key ends.

If you have a problem, ***DO NOT FORCE THE SHIFTER***, this will damage the cable, the shifter or the transmission. Simply start at the beginning and carefully check all your steps.

36. Disconnect the battery ground cable to prevent accidental shorts. Identify the neutral safety wires (engine will not crank unless these wires are connected together). Extend the wires to the shifter. Strip a 1/4" of insulation off the wires and install the slip-on terminals supplied in the kit. Crimp the terminals onto the wires using a crimping tool or pliers. Connect the neutral safety wires to the LOWER switch and the backup light wires to the UPPER switch (See Figure 1). Tape the terminal connections and all other connections to prevent shorts.

Reconnect the battery ground cable, disconnect the coil wire and set the parking brake. Check the switch operation by attempting to start the motor in each shifter position. **The starter must crank only when the shifter is in the Park or the Neutral position**. Check the backup light operation when the shifter is shifted to the Reverse position. Adjust the switches if required. Reconnect the coil wire.

37. With the shifter bolted securely to the floor be sure that the shifter operates correctly. Remove the side-grips and side plates by removing the six #6-32 screws (Figure 1). Install the cover over the shifter. **Put the cover over the stick and then push the stick forward. Hook the front of the cover over the front of the shifter mechanism and then put the rear of the cover over the rear of the mechanism (will take a few tries).** The cover is secured by two button head #10-32 screws (Figure 2). Install the handle on the reverse lockout lever using the #8-32 button head screw. The handle should stick out to the left of the shifter for easier one hand operation. Screw the red indicator pointer through the slot in the cover into the threaded end of the indicator lever. Use Loctite to keep the indicator pointer from turning. Select the correct indicator tape from the sheet and install it to the left of the pointer.

Fig. 2

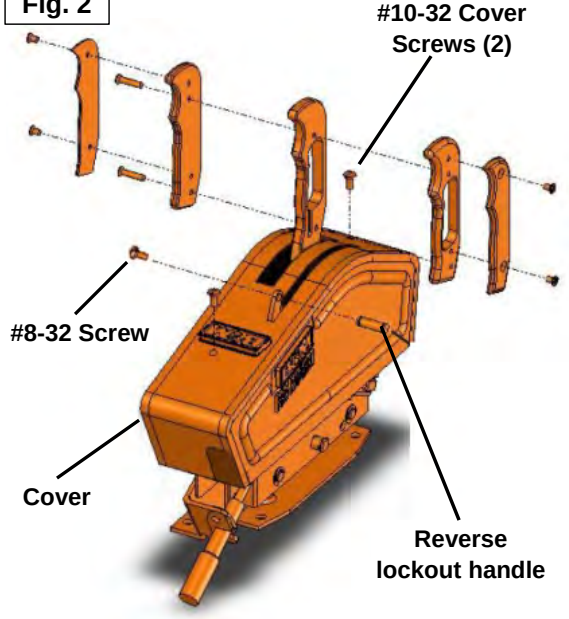

38. Re-install the side plates and side-grips onto the stick securely with the six #6-32 screws. Secure the carpet to the floorboard and the door edges. Your shifter is now ready to use.

WARNING

PERIODIC INSPECTION AND MAINTENANCE OF YOUR SHIFTER IS RECOMMENDED TO ENSURE THAT THE MECHANISM IS WELL LUBRICATED, FREE FROM DIRT OR RUST AND THAT THE CABLE IS PROPERLY ADJUSTED. LACK OF MAINTENANCE COULD RESULT IN A FAILURE INCLUDING A FAILURE OF THE REVERSE LOCKOUT SAFETY FEATURE.

OPERATION

The B&M Stealth Pro Ratchet Shifter is a ratchet shifter. You push the stick forward for up shifts and pull it back for down shifts (with a standard pattern valve body). The ratchet shift allows firm, positive, no-miss upshifts and downshifts. Move the knob forward or backwards as far is it will go to select the next gear. Then let the spring return the stick to the central position. When you shift from Drive to Neutral, the reverse lockout prevents the shifter from shifting any further (to prevent accidental selection of Reverse). To shift to Reverse the reverse lockout lever must be pushed forward. When the reverse lockout lever is pushed forward (with the shifter in Neutral) the lever snaps into the up position and is held there until the shifter is shifted to Reverse, so only one hand is needed.

On GM TH-200, TH-250, TH-350, TH-400, TH200 4R, TH700 R4, 4L60, 4L60E, 4L65E and Powerglide transmissions it is necessary to shift the ratchet twice to get from Reverse to Park. These transmissions have twice the travel from Reverse to Park as between the other gears. If you only ratchet once out of Reverse you will not be fully in Park gear and the car may move.

CHECK LIST

__ Locking steering column lever is permanently fastened in the full up position. Step 1.
__ Shifter is convenient to reach and has ample room for your hand in both park and low gear. Step 2.
__ Carpet covers floorboard holes. Step 4.
__ Cable is securely fastened to the shifter and held with E-clip. Step 5.
__ Shifter is securely mounted to floorboard. Step 7.
__ Shifter cable is clear of exhaust system, engine and any moving parts. Step 7.
__ Throttle lever and shift lever are tight on transmission. GM step 8, Ford Step 14, Chrysler Step 19, Powerglide Step 30.
__ Oil pan bolts are tightened to 12-13 lb.ft. GM Step 9, Ford Step 15, Chrysler Step 20, Powerglide Step 33.
__ Shifter is properly adjusted. Cable boots are installed, cable nuts are tightened and swivel is secured with cotter key. GM Step 10, Ford Step 16, Chrysler Step 21, Powerglide Step 34.
__ The Neutral safety switch is connected and properly adjusted to prevent engine starts in drive gears and reverse. GM Step 12, Ford Step 18, Chrysler not required, Powerglide Step 36.
__ There is no debris in the shifter mechanism.
__ Cover installed Step 37.
__ Shifter moves freely in all positions as described in Shifter Operation.
__ If your shifter is not working properly do not attempt to drive your car. Make sure you have followed all instructions. If the shifter is broken or defective return it to your B&M dealer.

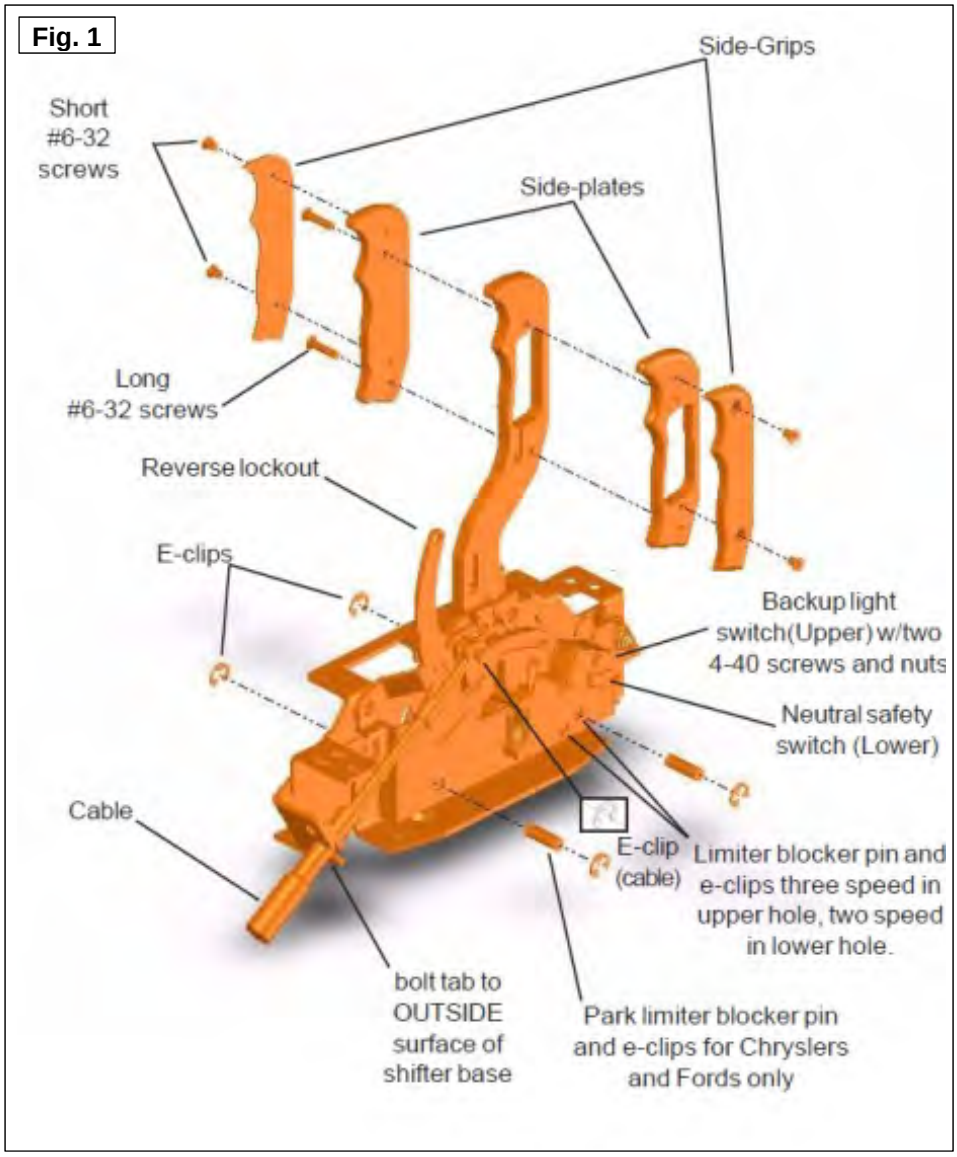

IMPORTANT: RETAIN THESE INSTRUCTIONS FOR FUTURE REFERENCE

Technical Service

A highly trained technical service department is maintained by Hurst Performance to answer your technical questions, provide additional product information and offer various recommendations.

Technical service calls, correspondence, and warranty questions should be directed to:

B&M Racing & Performance Products

(707) 544-4761

www.bmracing.com

CABLE ADJUSTMENT WARNING

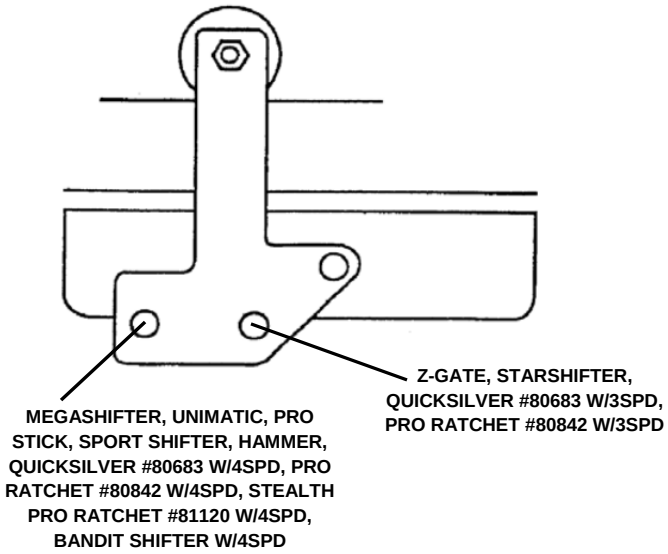

INSTALLATION

NOTE: Be careful. Select the correct hole for your shifter. Wrong hole **will** destroy the cable, shifter and/or transmission in **one** shift! (GM trans. only)

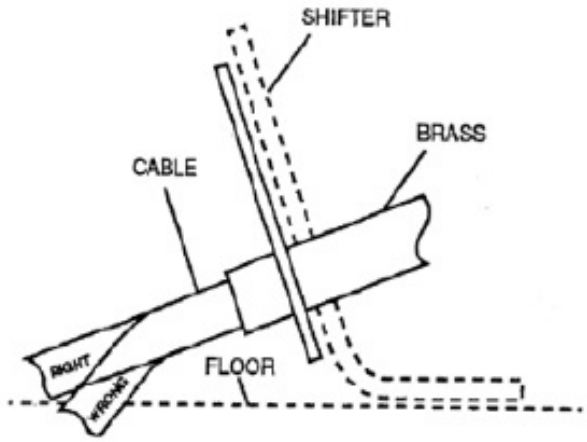

DO NOT KINK CABLE

Note: Do not kink cable anywhere along its length.

If cable has a kink, it will lock up. Cable should be kept straight for 2 inches on each end where it leaves the brass. Any of the above **will** destroy the cable, shifter and/or transmission in **one** shift!

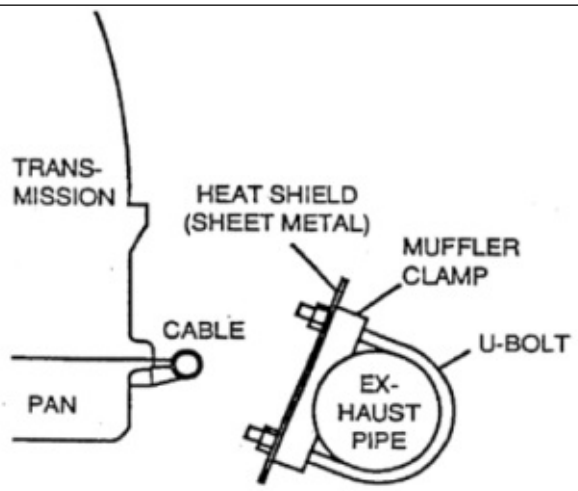

MELTED CABLES

Note: if your cable is close to your exhaust it will melt or become brittle. If this is the case, you will need to make a heat shield. **Do not wrap the cable, this retains heat**. Heat **will** destroy the cable!

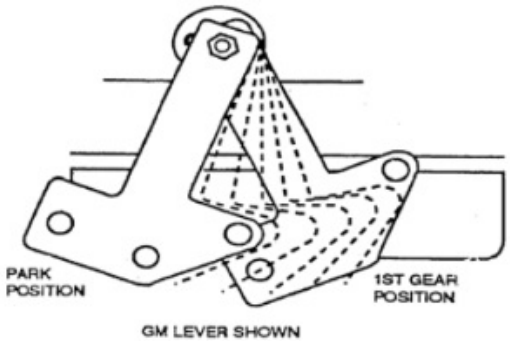

CABLE ADJUSTMENT

Note: if you don't adjust the cable correctly, you will destroy the cable, shifter and/or transmission in one shift. Put the transmission in low gear and shifter in low gear, set the swivel so it slides in and out of the correct hole freely(See installation picture). Then move the transmission and shifter to park (all the way the other way) then rotate the cable swivel until it slips in and out of the hole freely. Now go back and forth between Park and low gear and fine tune the adjustment. See instructions for further details.