Installation Instructions
SHIFTER IMPROVER KIT

Fits: 1989-1997 Ford, Lincoln and Mercury
w/E4OD Automatic Transmission
Catalog # 10025

WORK SAFELY! For maximum safety, perform this installation on a clean, level surface and with the engine turned off. Place blocks or wedges in front of and behind both rear wheels to prevent movement in either direction.

CAUTION: To avoid any possibility of bodily injury or damage to vehicle, do not attempt installation until you are confident that the vehicle is safely secured and will not move.

IMPORTANT: The E4OD is a complicated transmission to work on. Removing the spacer plate (required to drill orifices) on this transmission requires removing the Solenoid assembly, the Main and Accumulator valve bodies. Then finally the spacer plate, above which are up to 15 (depending on the model) check balls.

NOTE:

1. An Oil Filter is NOT supplied in this kit. Replace the Oil Filter with one appropriate for your application (2X4 or 4X4). *(See Figure 11)*

2. The transmission in your vehicle may have been replaced under warranty. Replacement transmissions generally (though not always) conform to the current model year when they are installed. Check the transmission I.D. tag to verify its model year.

3. **Do not assume this kit will work in a later model year transmission than indicated on the face of these instructions.** Factory product development introduces component changes almost every model year. Installing this kit in a more recent model year transmission than it was designed for could lead to complete transmission failure. Check with your B&M supplier for the current application part number.

4. This kit was designed to provide firm positive shift quality and improve transmission durability in original vehicle installations and those with moderate engine power improvements. This kit was not designed for and is not suitable for all out racing applications.

5. No recalibration kit can fix an already ailing transmission. If your E4OD is slipping, overheating, shifting irregularly or making noise, you should repair it before or in conjunction with the installation of your B&M E4OD Shift Improver Kit.

6. This kit does not change or modify the shift point speed (RPM) in any range. All transmission shift point speed (RPM) remain under control of the PCM (Power Control Module) as they are currently calibrated in your vehicles PCM.

General E4OD Information

This kit hydraulically recalibrates your transmission to produce firm positive shifts, this helps reduce clutch pack heat build-up and improves transmission durability. Your E4OD Transmission is controlled by the PCM which has full control of the E4OD's operation. All of the parameters that control fluid pressure, shift point RPM and TCC (Torque Converter Clutch) lockup speed have been preprogrammed into the PCM at the factory or by service updates. We have designed this kit as an easy way to overcome the less desirable features of the factory calibrated imperceptible shifts. With this kit you can set the shifting characteristics of your E4OD to one of two levels of shift performance, Heavy Duty or Street. Heavy Duty level produces a solid, noticeably firm shift when compared to the stock shift feel. While Street level produces a slightly quicker and more aggressive shift compared to Heavy Duty level.

After installing the B&M Shift Improver Kit the actual shift feel you get will depend on the current PCM calibration, Automatic Transmission Fluid (ATF) temperature and the type of ATF you have used. As ATF temperature increases it becomes thinner (less Viscous) which allows the fluid to flow faster through small orifices, thereby producing faster shift rates. In addition to the effects of temperature, each type of ATF (B&M Trick Shift®, Mercon®, Type F, etc.) has a specific characteristic friction property. This characteristic friction property is one of the variables that determines shift feel and clutch torque capacity. Mercon® type ATF's were formulated to produce smooth imperceptible shifts. While B&M Trick Shift® ATF with its higher friction properties results in firmer shift quality than Mercon® type ATF. Both Mercon® and B&M Trick Shift® ATF's are suitable for use in your E4OD transmission. For maximum performance and positive shift feel we recommend B&M Trick Shift® ATF.

CAUTIONS ABOUT PCM

The MIL (Malfunction Indicator Light or Check Engine Light) may be illuminated (turned ON) if the vehicle is started and the transmission electrical connector is disconnected. The MIL is programmed to illuminate whenever a system (engine or transmission) component malfunctions and at the same time a DTC (Diagnostic Trouble Code) is set in the PCM. You may have to refer to your owners' manual, a FORD service manual or visit a FORD dealer to determine the source of the malfunction(s) that cause(d) any DTC codes to be set and the required remedy.

Make sure your engine is in good tune and any problems related to set trouble codes are repaired BEFORE installing your B&M E4OD Shift Improver Kit.

Be careful when disconnecting the external electrical connector. The external wiring harness and/or connectors are easily damaged and problems become difficult to troubleshoot if the wiring is damaged. Metric tools are required to disassemble to E4OD. In addition to standard sockets and wrenches, a T30 TORX® driver is required to remove the solenoid valve body, see tool list for tool requirements

B&M TRANSMISSION ACCESORIES

Before installing your B&M E4OD Shift Improver Kit there are several accessory products you may wish to consider.

B&M TRICK SHIFT® ATF

B&M Trick Shift® Performance Automatic Transmission Fluid is a specially blended oil formulated with foam inhibitors, extreme pressure agents and shift improvers, this fluid asures protection while delivering the fastest possible shifts. You literally "Pour in Performance".

TRANSMISSION OIL COOLER
We feel that it is very important that every vehicle used in heavy duty or high performance application should have an auxiliary oil cooler. Excessive heat is the primary cause of transmission failures, and an auxiliary oi cooler is an inexpensive safeguard against overheating and failure. B&M offers a wide range of transmission coolers to suit every need and are available at your B&M dealer.

TEMPERATURE GAUGE KIT (#80212)
Most transmission and converter failures can be traced directly to excessive heat. The B&M transmission temperature gauge can save you a costly repair bill by warning you of an overheated transmission. The B&M temperature gauge comes with all necessary hardware and is easy to install.

DRAIN PLUG KIT (#80250)
Most E4OD transmission oil pans do not come from the factory equipped with drain plugs. The B&M Drain Plug Kit is inexpensive and easy to install. It eliminates the mess when changing fluid or on pan removal.

INTRODUCTION

The B&M E4OD Shift Improver kit can be installed in a few hours by carefully following the instructions. Select the level of shift performance depending on the vehicles intended to use:

1. Heavy Duty Level – Towing, campers, motor homes, 2 and 4 wheel drive light trucks. This level produces solid, noticeably firm shifts.

2. Street Level - Dual purpose performance vehicles. This level produces quicker, slightly more aggressive shifts than Heavy Duty Level.

SPECIAL PRECAUTIONS

Automatic transmissions operate at temperatures between 150F and 250F. We strongly recommend that the vehicle be allowed to cool for several hours before attempting disassembly to avoid serious burns from hot ATF and parts. The vehicle should be raised so there is at least 2 fee ground clearance for ease of installation and safely.

MAKE SURE THE VEHILCE IS RIGIDLY AND SECURELY SUPPORTED, JACK STANDS, WHEEL RAMPS OR A HOIST WORK BEST, DO NOT USE JACKS ALONE.

Transmission components are precision fit, work slowly and do not force any parts. Burrs and dirt are the number one enemies of an automatic transmission. Cleanliness is very important, so a clean work surface from which oil can easily be removed is necessary. Dirt, loose threads from rags and pieces of old gaskets can become lodged in valve bores and/or separator plate orifices and cause the transmission to malfunction. If you do not have a solvent cleaning setup available, get several spray cans of WD40® to clean your parts with.

When working on the valve bodies remove and replace modification items in one valve train at a time. This will minimize the chance of losing parts, mixing them up or other errors. When finished, clean thoroughly with solvent, then check all of the valve trains for freedom of movement (use a thin screw drive to move valves).

Warning: Almost all cleaning solvents pose a threat of fumes and or fire. Make sure to use cleaning solvents only in a well ventilated location away from any source of ignition such as open flames, sparks, hot water heaters, clothes, dryers, etc.

IMPORTANT!

Only use petroleum jelly to hold check balls and gaskets in place during installation. DO NOT use any kind of heavy or stringy bearing grease to hold check balls in place, these greases do not melt or mix readily with ATF and can block shift and pressure control solenoid fee circuit filters and orifices causing erratic shifts and potentially serious transmission damage because of low line pressure.

DISASSEMLBY

Have a large oil drain pan ready to catch oil and a clean tray on which to put small parts, check balls and bolts so they won't get lost or dirty

1. Remove the 2 transmission heat shield bolts (8mm socket) located on the right hand side of the transmission. Remove heat shield to gain access to the electrical connector located above the pan rail, behind the heat shield. Thoroughly clean the area around the electrical connector before proceeding. DO NOT attempt to pry the connector its locking tab with a screwdriver. Remove the connector by pushing the center tab IN to release and pulling up on the wire harness.

2. Since most E4OD's are not factory equipped with an oil pan drain plug, you can use the following technique to drain the transmission fluid. Position your drain pan beneath the transmission to catch the oil. Remove all except the 2 front center bolts (10mm socket) from the oil pan. Next, loosen but do not remove the two front bolts allowing the rear of the pan to drop down and drain the fluid. If the pan sticks to the gasket, insert a flat screwdriver between the pan and case and pry down gently to break pan loose. Remove all old pan gasket material and clean the oil pan and case surfaces. Clean inside and above the electrical connector bore.

3. Remove the oil filter by pulling it straight down out of the case. Being careful not to damage the bore, remove the filter seal from the pump housing bore *(See Figure 1)*.

4. Remove 9 TORX® drive screws (T30 driver) and 1 nut (10mm socket) from the solenoid valve body. Make sure the external electrical connector has been completely disconnected then pull the solenoid valve body straight down, out of the case. Set the solenoid assembly aside in a clean location.

5. Remove 11 bolts (8mm socket) and 2 nuts (10mm socket) from the accumulator valve body *(See Figure 1).* Remove the accumulator assembly from the case and place on work bench.

6. Referring to Figure 1, DO NOT REMOVE the 2 Main Valve Body bolts noted on the illustration. Remove 14 bolts (8mm socket) and 2 nuts (10mm socket) from the Main Valve Body. Remove the Main Valve Body from the case and place on work bench.

7. Next you will remove the separator plate which is located above the case check ball *(See Figure 2)*, one of which is spring loaded. Be very careful when lowering the separator plate from the case so as to retain all of the check balls and keep them in their respective position on the plate itself. A large drain pan and clean work area can be helpful in finding stray check balls should they roll off the separator plate.

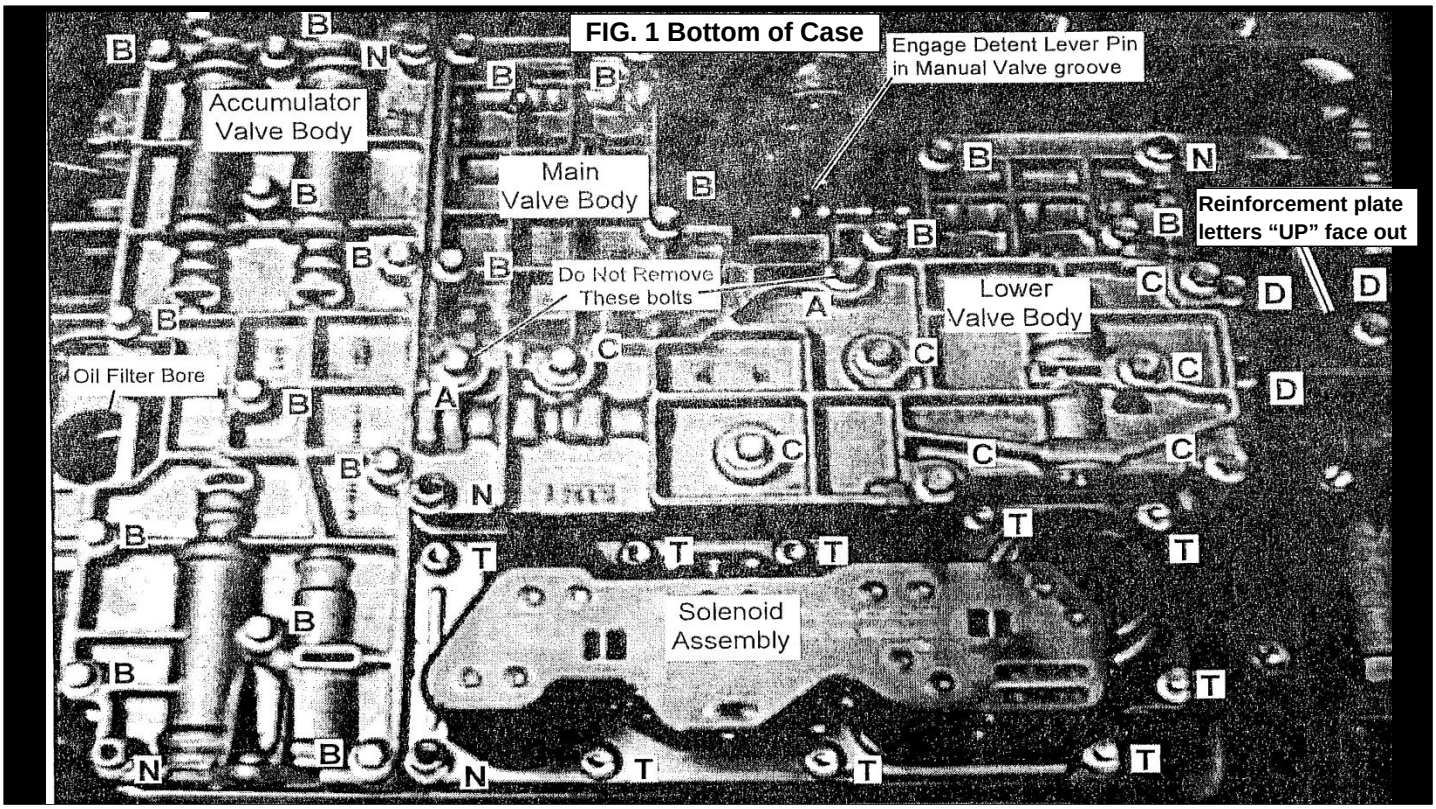

ITEM	DESCRIPTION	QTY	ITEM	DESCRIPTION	QTY
A	M6 x .75 x 36mm	2	D	M6 x .75 x 15mm	3
B	M6 x .75x 42mm	18	N	M6 x .75 NUT	5
C	M6 x .75 x66mm	7	T	T30	9

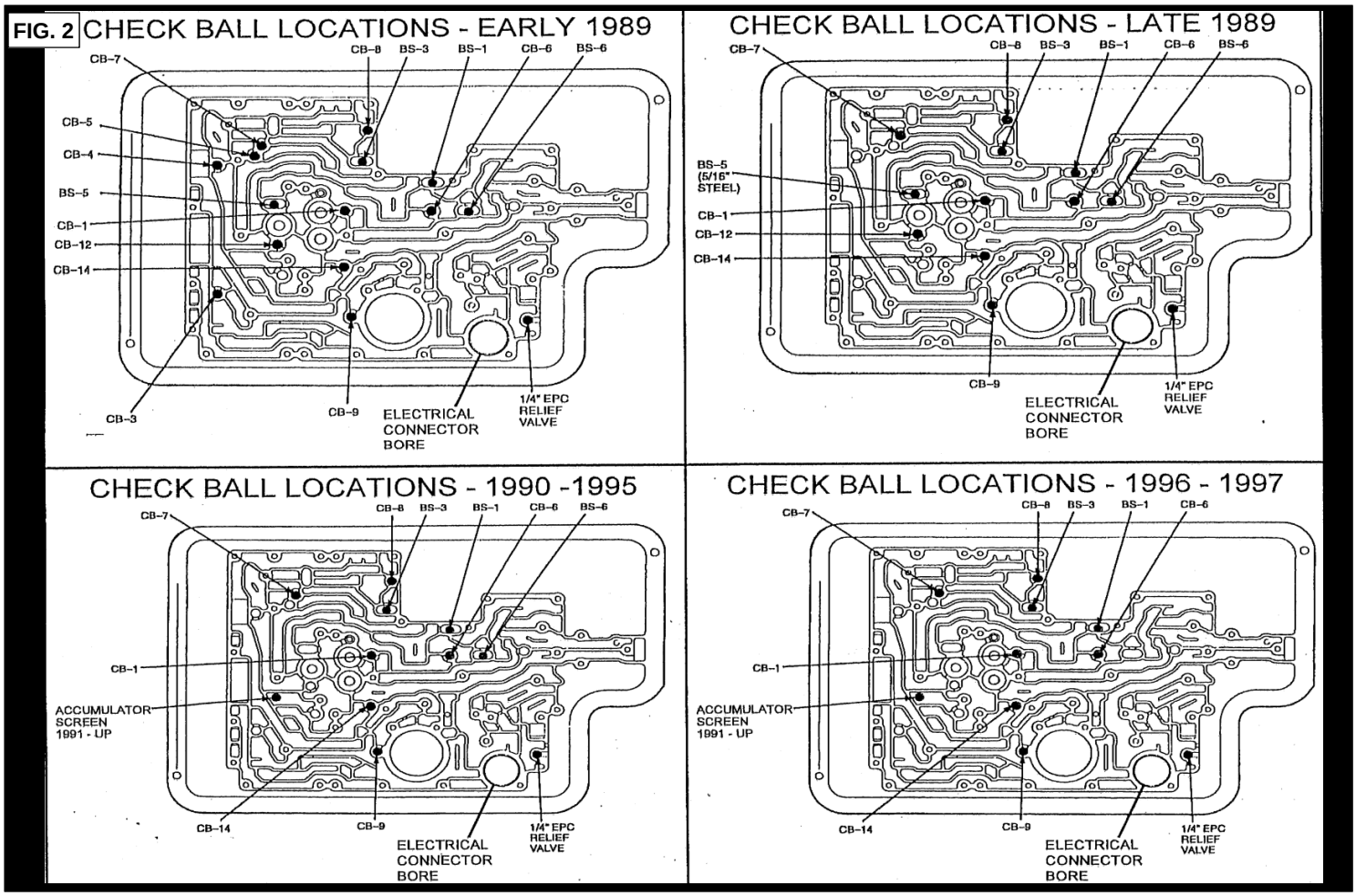

While holding the separator plate up to the case, remove 3 bolts (8mm socket) from the separator plate reinforcing plate. Carefully lower the plate from the case, trying to keep the check balls in their respective positions on the separator plate. Confirm the number of check balls in your unit agrees with the diagram for your model year transmission. If you have more or less than shown on the diagram and you are sure none have been lost (during assembly), check the ID tag for the correct model year *(See Figure 4).*

Fig. 4

I.D. Tag is located on the rear right hand side of the transmission

TRANSMISSION MODEL
SERVICE I.D.
SERIAL NUMBER
BUILD DATE (BD- YEAR, MONTH & DAY)

1992-2	JAN-A	JUL-G
1993-3	FEB-B	AUG-H
1994-4	MAR-C	SEP-J
1995-5	APR-D	OCT-K
1996-6	MAY-E	NOV-L
1997-7	JUN-F	DEC-M

(In this example; 3K09 = 1993, October 9th)

MODIFICATIONS

8. Remove the Solenoid filter and any gasket stuck to the separator plate. Enlarge the orifices shown in Figure 5 with the supplied drill bit. Unpredictable shift characteristics and/or transmission damage can result if these orifices are frilled larger than the supplied bit. Remove any burrs from the drilled holes by rubbing a flat file across the orifices on both sides of the separator plate. Clean the plate and remove all loose metal filings.

FIG. 5

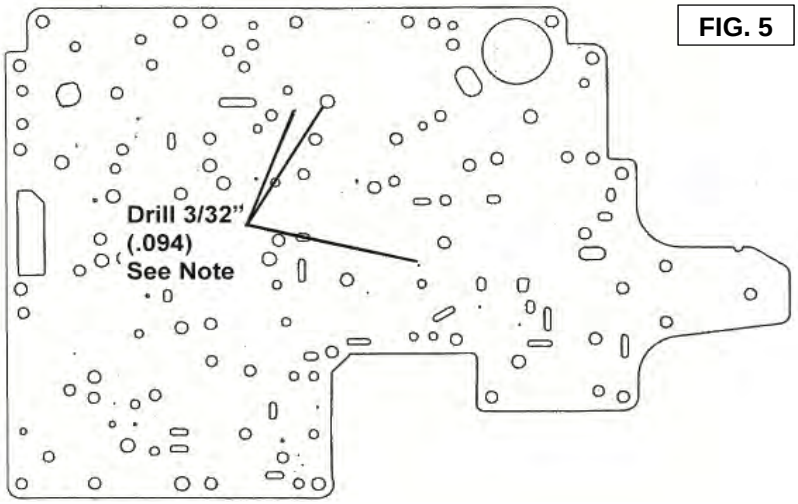

NOTE: Drill Orifices indicated above ONLY if they are smaller than the 3/32" drill provided.
Some applications will have a large diameter hole at the positions indicated.
Do Not drill any orifices other than those indicated.

FIG. 6

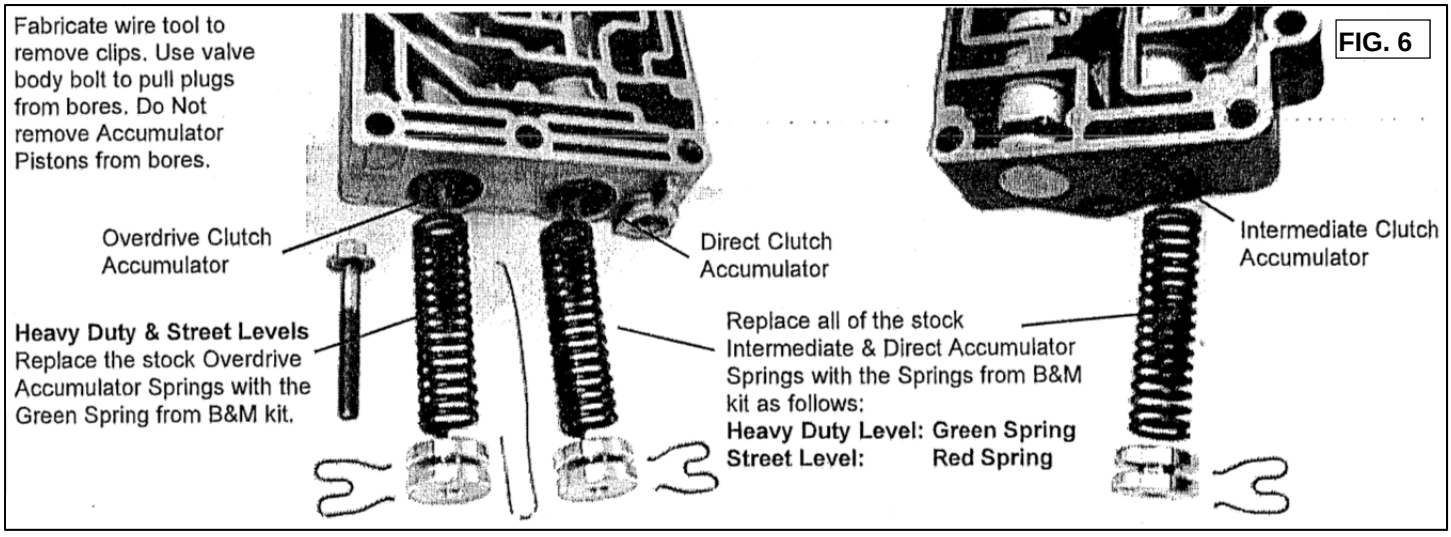

9. Modify the Accumulator Valve Body as shown in Figure 6 according to your desired shift performance level. You can easily remove the valve train retaining clips by bending a small hook on a small diameter wire (paper clip) and using to hook and remove the clip. The clips are spring loaded so be very cautious when removing them as they can pop off and fly quite a distance. Once on the floor, the clips are extremely difficult to see.

10. Modify the Main Valve Body as shown in Figure 7. You do not have to remove the Lower Valve from the Main Valve Body to install the kit components. We have provided the Check Ball location diagram for the Lower Valve Body in case it is needed *(See Figure 3)*.

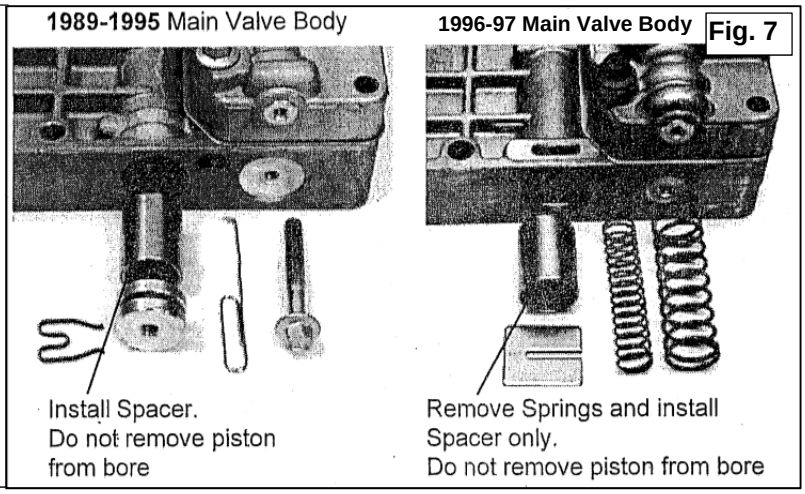

11. If you are installing this kit while the transmission is removed from the vehicle then install the BLUE B&M Pressure Regulator Spring in the Oil Pump as shown in Figure 8. If you install this spring in the pump you may also install the supplied electrical component in the wire loom. Installing both the spring and the electrical component will increase part throttle shift feel.

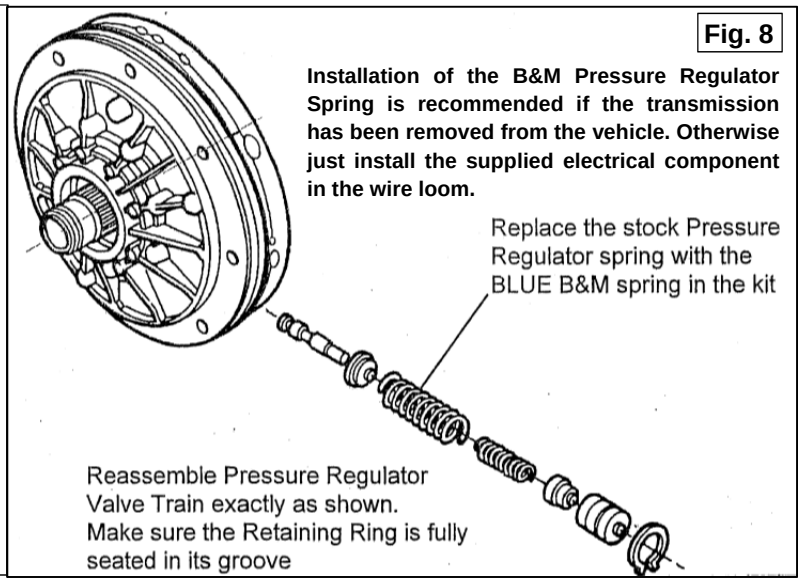

RE-ASSEMLY

12. Install the Spring that holds the 1/4” Steel EPC Check Ball and the spring loaded Accumulator Screen (’91 up) into the case *(See Figure 3)* holding them in place with a dab of petroleum jelly. The spring end of the Accumulator Screen goes toward the case.

13. Check the gaskets specified for your model year *(See Figure 9 on next page)* by placing them against the spacer plate, one at a time, to verify that none of the spacer plate holes are blocked by the gasket. Apply several daubs of petroleum jelly to the spacer plate to hold the gaskets in place. Stick the gaskets on the appropriate sides of the spacer place. Referring to the appropriate model year Check Ball placement illustration *(See Figure 3)*, place a check ball on each required check ball hole location holding them in place with a daub of petroleum jelly. Notice that most all of the cae Check Balls are 5/16” dia. rubber, EXCEPT for the 1/4" dia. steel EPC Check Ball and the 5/16” dia. steel Check Ball used only in the late 1989.

FIG. 9

THIS KIT INCLUDES TWO SETS OF SPACER PLATE GASKETS WHICH HAVE A PRINTED COLOR STRIP FOR IENTIFICATION. INDIVIDUALLY CHECK THE GASKETS YOU SELECT AGAINST THE SPACER PLATE FOR PROPER FIT. MAKE SURE NO SPACER PLATE HOLES ARE BLOCKED.

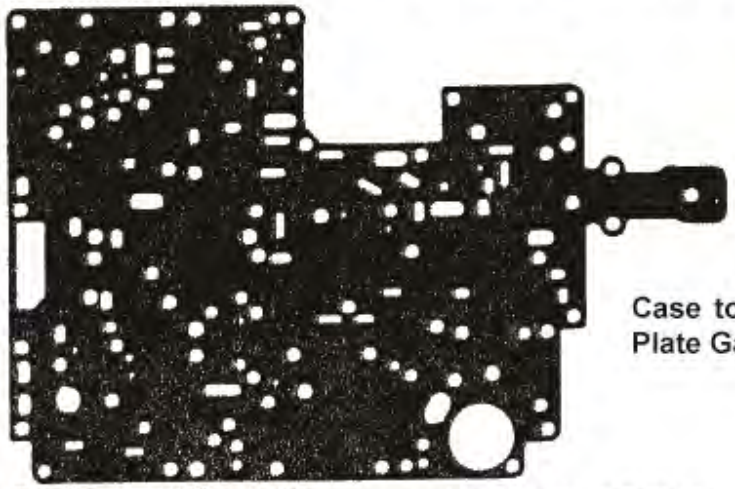

Case to Spacer Plate Gasket

YELLOW STRIPE: 1989-1995
GREEN STRIPE: 1996-1997

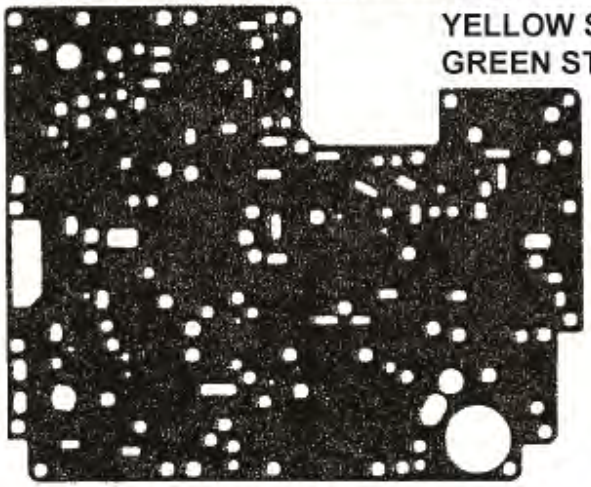

Spacer Plate to Valve Body Gasket

Fig. 10

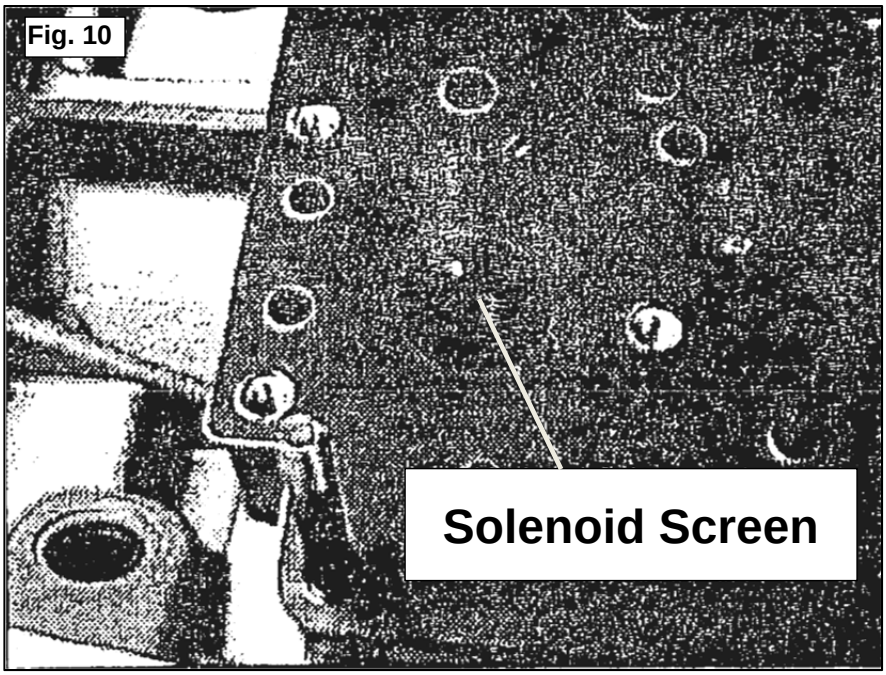

Fig. 11

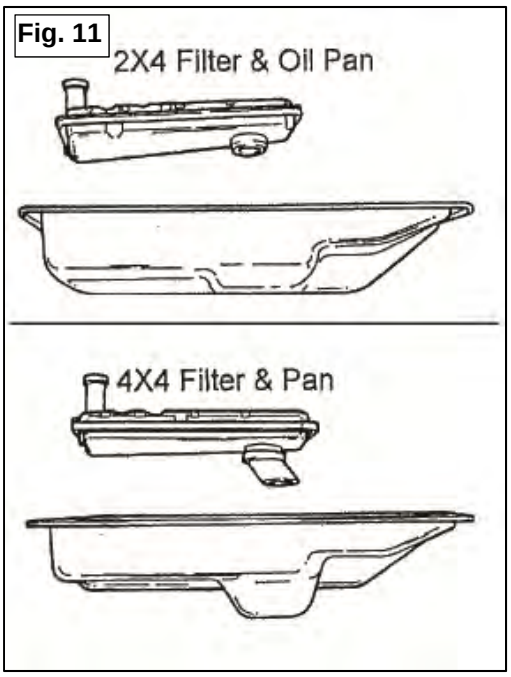

14. Make sure the case surface is clean and free of old gasket material. Carefully guide the spacer plate over the studs onto the case. Install one of the reinforcing plate screws to hold the plate up to the case. Install the Reinforcing Plate (stamped letters “UP” facing away from case) and torque the 3 bolts (8mm socket) to 9-11 Nm (80-100 lb*in.). Install the Solenoid Screen as shown in Figure 10, rotate the screen to lock it in place.

15. Guide the Main Valve Body over the studs. Align the Groove in the Manual Shift Valve with the Pin in the Detent Lever *(See Figure 1).* Starting in the center and working circularly outward, torque the 14 bolts (8mm socket) and 2 nuts (10mm socket) to 9-11 Nm (80-100 lb*in).

16. Guide the Accumulator Valve Body over the case studs. Starting in the center and working circularly outward, torque the 14 bolts (8mm socket) and 2 nuts (11mm socket) to 9-11Nm (80-100 lb*in.)

17. Coat the case electrical connector bore *(See Figure 2)* with Silicone Brake Caliper Grease (if unavailable, use petroleum jelly). Guide the Solenoid Body Assembly over the stud and push up against the case. Install and torque the 9 Torx screws (T30 driver) and 1 nut (10mm socket) to 9-11 Nm (80-100 ob*in).

18. Double check the installation. Are all of the valve body and reinforcement plate screws installed and torqued: Any leftover Check Balls? Is the Manual valve engaged with the Detent Lever pin? Save all of the items that were removed or ex hanged during the installation until after the unit has been test driven.

19. An Oil Filter is NOT supplied int his kit. Replace the Oil Filter with one appropriate for your application (2x4 or 4x4) *(See Figure 11).* Coat the filter pickup tube seal with clean ATF then push the filter firmly up into the pump bore.

20. Place the new pan gasket supplied in the kit OR original reusable rubber gasket on the pan rail and install pan. Install all bolts first then torque them (10mm socket) to 14-16Nm (10-12 lb*ft). Avoid leaks, DO NOT over torque the pan bolts.

21. Install the suppled electrical module in the PCM wire loom. We recommend attaching the module at the PCM connector end of the loom. However, it is sometimes easier to install the module at the transmission connector end. Install the Scotchlok® spade connectors on the 2 wires shown in Figure 12 and crimp them in place. Plug the supplied module into the connectors.

Pin 97 Red
Pin 81 White with Yellow Stripe
Attach tap connectors to wires on Pin 97 and Pin 81.

The PCM Connector is located inside the engine compartment on either the extreme left or right side of the fire wall.

Fig. 12

60 Pin EEC-IV PCM Connector

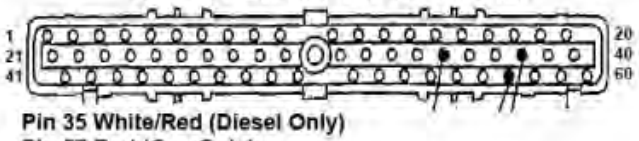

Pin 35 White/Red (Diesel Only)
Pin 57 Red (Gas Only)
Pin 38 White with Yellow Stripe
Attach tap connectors to wire on Pins 35 or 38 and wire on pin 57.

12 PIN Transmission Electrical Connector

This is the alternate placement location for the electric module. Attach the tap connectors to the wires on Pin 11 and Pin 12. Position the tap connectors at least 6 inches from the 12 pin connectors so the tap connectors will be well away from the heat shield area.

You may install (though we do not recommend it) the supplied electric module in the wire loom in addition to installing the supplied pressure regulator spring in the pump. Installing both the spring and the electrical module may result in harsh part throttle shift performance.

22. Install the Transmission Electrical Connector, making sure it is fully seated. An audible click should be heard as the connector seats and tab locks. Replace the transmission heat shield in reverse order of removal. Torque the heat shield bolts to 9-12 Nm (80-110 lb*in).

23. Fill the transmission with MERCON® or B&M Trick Shift® ATF. You will need approximately 8 quarts (stock 4x2 pan). With the vehicles wheels off the ground and brakes applied, start the engine. Slowly shift the transmission repeatedly between Reverse and Drive to eliminate the air in the hydraulic circuits. With the engine still running and the shift lever in Park, check the ATF level. TURN OFF ENGINE. Fill to the proper level as indicated on the dipstick. Lower the vehicle to the ground.

Troubleshooting Guide

No Forward or Reverse

*Manual valve not engaged with detent lever pin.
*Reinforcement plate or valve body bolts not tightened and torqued.
*Main Oil Filter not installed or seal mission or damaged.
*Pressure regulator boost valve retaining ring not fully seated if B&M pressure regulator spring was used.
*Check Line Pressure.

Forward & Reverse work but has no upshifts:

*External electrical connector not fully seated in the Solenoid body.
*Reinforcement plate or valve body bolts not tightened and torqued.
*Check balls missing or installed in wrong location.
*Blown PCM fuse.

Forward & Reverse work but has soft upshifts and Reverse slips.

*Reinforcement plate or valve body bolts not tightened and torqued.

*Check balls missing or installed in wrong location.

*Pressure regulator boost valve retaining ring not fully seated if B&M pressure regulator spring was used.

*Main Oil Filter seal missing or damaged.

*Check Line Pressure.

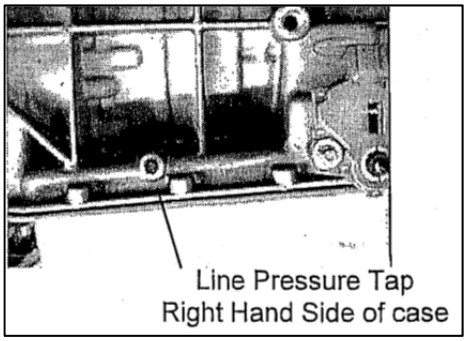

Use this Line Pressure Chart ONLY when B&M Electrical Module is installed

Gear	Line Pressure (Idle)		Line Pressure (Stall)	
	PSI	kPa	PSI	kPa
P, N	60-75	414-518	---------	---------
R	80-110	552-759	240-265	1656-1827
OD, 2	60-75	414-518	156-174	1075-1200
1	80-110	552-759	157-186	1082-1282

Use this Line Pressure Chart ONLY when Blue B&M Pressure Regulator Spring is installed

Gear	Line Pressure (Idle)		Line Pressure (Stall)	
	PSI	kPa	PSI	kPa
P, N	70-85	482-586	----------	----------
R	98-128	672-888	259-286	1656-1967
OD, 2	70-85	380-586	155-195	1075-1346
1	75-120	518-828	155-205	1070-1415

IMPORTANT: RETAIN THESE INSTRUCTIONS FOR FUTURE REFERENCE

Technical Service

A highly trained technical service department is maintained by Hurst Performance to answer your technical questions, provide additional product information and offer various recommendations.

Technical service calls, correspondence, and warranty questions should be directed to:

B&M Racing & Performance Products

(707) 544-4761

www.bmracing.com